# ACCESSORIES

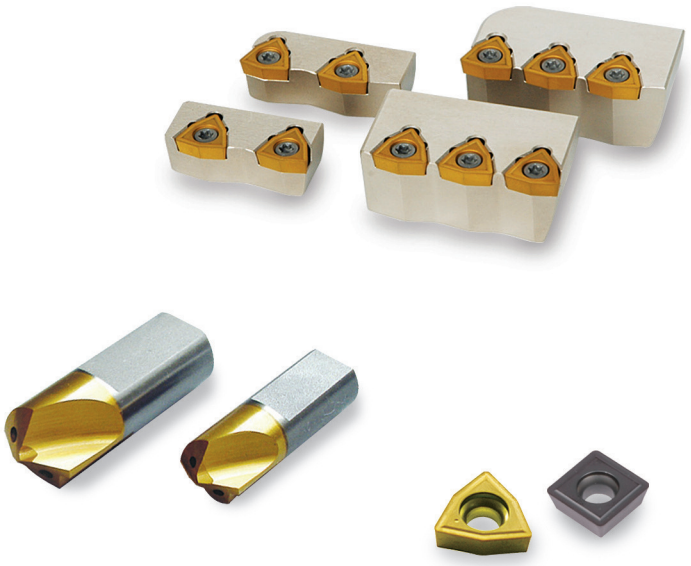

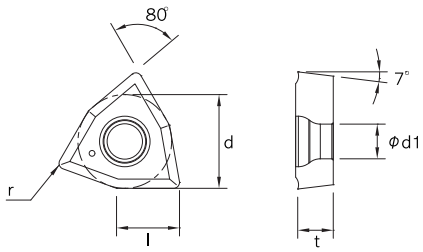


## ▶ WCMX

| Code No. | 치수 Dimension(mm) | | | | | 부품 Parts | |
|---|---|---|---|---|---|---|---|
| | l | d | t | r | ø d1 | Screw | Driver |
| WCMX030204 PA | 3.8 | 5.56 | 2.38 | 0.4 | 2.5 | TSB-22045 | TXL-6 |
| WCMX040204 PA | 4.3 | 6.35 | 2.38 | 0.4 | 2.8 | TSB-25055 | TXL-8 |
| WCMX050308 PA | 5.4 | 7.94 | 3.18 | 0.8 | 3.4 | TSB-30070 | |
| WCMX06T308 PA | 6.5 | 9.525 | 3.97 | 0.8 | 4.4 | TSB-35090 | TXL-15 |
| WCMX080408 PA | 8.7 | 12.7 | 4.76 | 0.8 | 5.5 | TSB-40110 | |

| Code No. | 피삭재 Workpiece | | | | | 적용 드릴 For Drill | | | |
|---|---|---|---|---|---|---|---|---|---|
| | P | M | K | N | S | HSD(MCD) | VLT(TMD) | VMD | TPD |
| WCMX030204 PA | ◎ | ○ | ○ | △ | △ | ø16.0 ~ø20.0 | ø25 | ø45 ~ø55 | – |
| WCMX040204 PA | ◎ | ○ | ○ | △ | △ | ø20.5 ~ø25.0 | ø26.0 ~ø30.0 | ø55 ~ø60 | – |
| WCMX050308 PA | ◎ | ○ | ○ | △ | △ | ø25.5 ~ø30.0<br>– | ø31.0 ~ø40.0<br>ø60.0 ~ø75.0 | ø60 ~ø75<br>ø100 ~ø105 | ø40~ø55 |
| WCMX06T308 PA | ◎ | ○ | ○ | △ | △ | ø31.0 ~ø41.0<br>ø59.0 ~ø80.0 | ø41.0 ~ø50.0<br>ø75.0 ~ø80.0 | ø75 ~ø100<br>ø105 ~ø140 | ø60~ø110 |
| WCMX080408 PA | ◎ | ○ | ○ | △ | △ | ø42.0 ~ø58.0 | ø51.0 ~ø59.0 | ø140 ~ø180 | – |

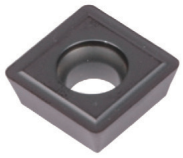

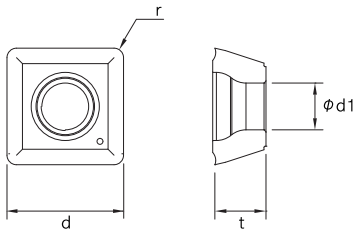


## ▶ SPMX

| Code No. | 치수 Dimension(mm) | | | | 부품 Parts | |
|---|---|---|---|---|---|---|
| | d | t | r | ø d1 | Screw | Driver |
| SPMX050204 PA | 5.00 | 2.38 | 0.4 | 2.25 | TSB-20045 | TXL-6 |
| SPMX060204 PA | 6.00 | 2.38 | 0.4 | 2.61 | TSB-22052 | |
| SPMX07T308 PA | 7.94 | 3.97 | 0.8 | 2.85 | TSB-25065 | TXL-8 |
| SPMX090408 PA | 9.80 | 4.30 | 0.8 | 4.05 | TSB-35090 | TXL-15 |
| SPMX110408 PA | 11.50 | 4.80 | 0.8 | 4.45 | TSB-40100 | |
| SPMX140512 PA | 14.30 | 5.20 | 1.2 | 5.75 | TSB-50125 | TXL-20 |

| Code No. | 피삭재 Workpiece | | | | | 적용 드릴 For Drill | |
|---|---|---|---|---|---|---|---|
| | P | M | K | N | S | STD-V | FXD |
| SPMX050204 PA | ◎ | ○ | ○ | △ | △ | ø13.0 ~ø15.0 | ø18.0 ~ø19.5 |
| SPMX060204 PA | ◎ | ○ | ○ | △ | △ | ø15.5 ~ø21.5 | ø20.0 ~ø25.0 |
| SPMX07T308 PA | ◎ | ○ | ○ | △ | △ | ø22.0 ~ø27.5 | ø25.5 ~ø30.0 |
| SPMX090408 PA | ◎ | ○ | ○ | △ | △ | ø28.0 ~ø33.0<br>ø50.0 ~ø60.0 | –<br>– |
| SPMX110408 PA | ◎ | ○ | ○ | △ | △ | ø34.0 ~ø41.0<br>ø60.0 ~ø75.0 | –<br>– |
| SPMX140512 PA | ◎ | ○ | ○ | △ | △ | ø42.0 ~ø50.0<br>ø75.0 ~ø80.0 | –<br>– |

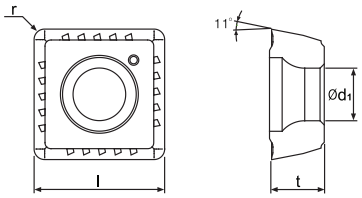


## ▶ SPMT

| Code No. | 치수 Dimension(mm) | | | | 부품 Parts | |
|---|---|---|---|---|---|---|
| | l | t | r | ø d1 | Screw | Driver |
| SPMT040204 PD | 4.7 | 2.4 | 0.4 | 2.3 | TSB-22045 | TXL-6 |
| SPMT050204 PD | 5.1 | 2.4 | 0.4 | 2.3 | | |
| SPMT060205 PD | 6.2 | 2.5 | 0.5 | 2.5 | TSB-22052 | |
| SPMT07T208 PD | 7.5 | 2.8 | 0.7 | 2.8 | TSB-25065 | TXL-8 |
| SPMT090308 PD | 9.2 | 3.3 | 0.8 | 3.4 | TSB-30072 | |
| SPMT11T308 PD | 11.0 | 4.0 | 0.8 | 4.0 | TSB-35080 | TXL-15 |
| SPMT130410 PD | 13.0 | 4.5 | 1.0 | 4.5 | TSB-40100 | |
| SPMT15M510 PD | 15.2 | 5.0 | 1.0 | 5.5 | TSB-50125 | TXL-20 |
| SPMT180510 PD | 18.2 | 5.5 | 1.0 | 6.0 | | |

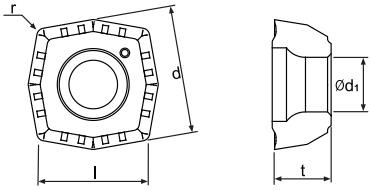


## ▶ XOMT

| Code No. | 치수 Dimension(mm) | | | | | 부품 Parts | |
|---|---|---|---|---|---|---|---|
| | l | t | t | r | ø d1 | Screw | Driver |
| XOMT040204 PD | 4.3 | 4.9 | 2.4 | 0.4 | 2.3 | TSB-22045 | TXL-6 |
| XOMT050204 PD | 4.8 | 5.4 | 2.4 | 0.4 | 2.3 | | |
| XOMT060204 PD | 5.8 | 6.6 | 2.5 | 0.4 | 2.5 | TSB-22052 | |
| XOMT07T205 PD | 6.9 | 7.8 | 2.8 | 0.5 | 2.8 | TSB-25065 | TXL-8 |
| XOMT090305 PD | 8.4 | 9.6 | 3.3 | 0.5 | 3.4 | TSB-30072 | |
| XOMT11T306 PD | 10.0 | 11.4 | 4.0 | 0.6 | 4.0 | TSB-35080 | TXL-15 |
| XOMT130406 PD | 11.9 | 13.6 | 4.5 | 0.6 | 4.5 | TSB-40100 | |
| XOMT15M508 PD | 13.9 | 15.9 | 5.0 | 0.8 | 5.5 | TSB-50125 | TXL-20 |
| XOMT180508 PD | 16.5 | 18.9 | 5.5 | 0.8 | 6.0 | | |

| Code No. | | 피삭재 Workpiece | | | | | KSD |
|---|---|---|---|---|---|---|---|
| 외측 Peripheral Insert | 내측 Central Insert | P | M | K | N | S | |
| SPMT040204 PD | XOMT040204 PD | ◎ | ○ | ○ | △ | △ | ø13.0~ø13.5 |
| SPMT050204 PD | XOMT050204 PD | ◎ | ○ | ○ | △ | △ | ø14.0~ø16.0 |
| SPMT060205 PD | XOMT060204 PD | ◎ | ○ | ○ | △ | △ | ø16.5~ø19.5 |
| SPMT07T208 PD | XOMT07T205 PD | ◎ | ○ | ○ | △ | △ | ø20.0~ø23.5 |
| SPMT090308 PD | XOMT090305 PD | ◎ | ○ | ○ | △ | △ | ø24.0~ø29.5 |
| SPMT11T308 PD | XOMT11T306 PD | ◎ | ○ | ○ | △ | △ | ø30.0~ø35.0 |
| SPMT130410 PD | XOMT130406 PD | ◎ | ○ | ○ | △ | △ | ø36.0~ø42.0 |
| SPMT15M510 PD | XOMT15M508 PD | ◎ | ○ | ○ | △ | △ | ø43.0~ø50.0 |
| SPMT180510 PD | XOMT180508 PD | ◎ | ○ | ○ | △ | △ | ø51.0~ø60.0 |

## ▶ 인서트 재종 일람표 Insert material type list

| Workpiece Meterial | Symbol | Color | Cotting |
|---|---|---|---|
| P Steel | KT510<br>KT520 | Gold<br>Black | TiAlN<br>TiCN |
| M Stainless Steel | KT610<br>KT620 | Gold<br>Black | TiAlN<br>TiCN |
| K Cast Iron | KT710<br>KT720 | Gold<br>Black | TiAlN<br>TiCN |

# CARTRIDGE

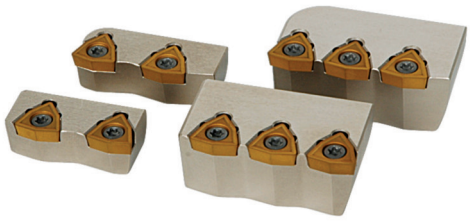

| Inner | Outer | Insert | Screw | Driver | For Drill |
|---|---|---|---|---|---|
| HSC-5965N | HSC-5965T | WCMX06T308 | TSB-35090 | T-15 | HSD-5965..D |
| HSC-6570N | HSC-6570T | | | | HSD-6570..D |
| HSC-7075N | HSC-7075T | | | | HSD-7075..D |
| HSC-7580N | HSC-7580T | | | | HSD-7580..D |
| VMC-045050N | VMC-045050T | WCMX030204 | TSB-22045 | T-6 | VMD-045050 |
| VMC-050055N | VMC-050055T | | | | VMD-050055 |
| VMC-055060N | VMC-055060T | WCMX040204 | TSB-25055 | T-8 | VMD-055060 |
| VMC-060065N | VMC-060065T | WCMX050308 | TSB-30070 | | VMD-060065, VLT·VSD-6065 |
| VMC-065070N | VMC-065070T | | | | VMD-065070, VLT·VSD-6570 |
| VMC-070075N | VMC-070075T | | | | VMD-070075, VLT·VSD-7075 |
| VMC-075080N | VMC-075080T | WCMX06T308 | TSB-35090 | T-15 | VMD-075080, VLT·VSD-7580 |
| VMC-080085N | VMC-080085T | | | | VMD-080085 |
| VMC-085090N | VMC-085090T | | | | VMD-085090 |
| VMC-090095N | VMC-090095T | | | | VMD-090095 |
| VMC-095100N | VMC-095100T | | | | VMD-095100 |
| VMC-100105N | VMC-100105T | WCMX05308 | TSB-30070 | T-8 | VMD-100105 |
| VMC-105110N | VMC-105110T | WCMX06T308 | TSB-35090 | T-15 | VMD-105110 |
| VMC-110115N | VMC-110115T | | | | VMD-110115 |
| VMC-115120N | VMC-115120T | | | | VMD-115120 |
| VMC-120125N | VMC-120125T | | | | VMD-120125 |
| VMC-125130N | VMC-125130T | | | | VMD-125130 |
| VMC-130135N | VMC-130135T | | | | VMD-130135 |
| VMC-135140N | VMC-135140T | | | | VMD-135140 |
| VMC-140150N | VMC-140150T | WCMX080408 | TSB-40110 | | VMD-140150 |
| VMC-150160N | VMC-150160T | | | | VMD-150160 |
| VMC-160170N | VMC-160170T | | | | VMD-160170 |
| VMC-170180N | VMC-170180T | | | | VMD-170180 |

※ Drill 카트리지는 드릴바디의 수명을 연장시키고 바깥쪽 카트리지 단면을 밀링 작업으로 직경을 (5mm/10mm)조절할 수 있습니다.

※ Please place an order shorten the length of outer cartridge if smaller diameter is needed.
(ex : ø77=by 1.5mm cutting MDC-075080T)

| Inner | Outer | Insert | Screw | Driver | For Drill |
|---|---|---|---|---|---|
| HDC-5965N | HDC-5965T | WCMX06T308 | TSB-35090 | T-15 | SFD·MCD-5965..D |
| MDC-045050N | MDC-045050T | WCMX030204 | TSB-22045 | T-6 | MXD-045050 |
| MDC-050055N | MDC-050055T | | | | MXD-050055 |
| MDC-055060N | MDC-055060T | WCMX040204 | TSB-25055 | T-8 | MXD-055060 |
| MDC-060065N | MDC-060065T | WCMX050308 | TSB-30070 | T-15 | MXD-060065 |
| MDC-065070N | MDC-065070T | | | | MXD-065070, TSD·TMD-6570..D |
| MDC-070075N | MDC-070075T | | | | MXD-070075, TSD·TMD-7075..D |
| MDC-075080N | MDC-075080T | WCMX06T308 | TSB-35090 | | MXD-075080, TSD·TMD-7580..D |
| MDC-080085N | MDC-080085T | | | | MXD-080085, TSD·TMD-6570..D |
| MDC-085090N | MDC-085090T | | | | MXD-085090, TSD·TMD-7075..D |
| MDC-090095N | MDC-090095T | | | | MXD-090095, TSD·TMD-7580..D |
| MDC-095100N | MDC-095100T | | | | MXD-095100 |
| MDC-100105N | MDC-100105T | WCMX050308 | TSB-30070 | T-8 | MXD-100105 |
| MDC-105110N | MDC-105110T | WCMX06T308 | TSB-35090 | T-15 | MXD-105110 |
| MDC-110115N | MDC-110115T | | | | MXD-110115 |
| MDC-115120N | MDC-115120T | | | | MXD-115120 |
| MDC-120125N | MDC-120125T | | | | MXD-120125 |
| MDC-125130N | MDC-125130T | | | | MXD-125130 |
| MDC-130135N | MDC-130135T | | | | MXD-130135 |
| MDC-135140N | MDC-135140T | | | | MXD-135140 |
| MDC-140150N | MDC-140150T | WCMX080408 | TSB-40110 | | MXD-140150 |
| MDC-150160N | MDC-150160T | | | | MXD-150160 |
| MDC-160170N | MDC-160170T | | | | MXD-160170 |
| MDC-170180N | MDC-170180T | | | | MXD-170180 |

※ Drill 카트리지는 드릴바디의 수명을 연장시키고 바깥쪽 카트리지 단면을 밀링 작업으로 직경을 (5mm/10mm)조절할 수 있습니다.

※ Please place an order shorten the length of outer cartridge if smaller diameter is needed.
(ex : ø77=by 1.5mm cutting MDC-075080T)

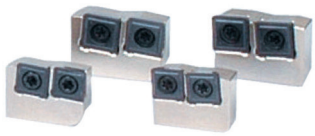

| Inner | Outer | Insert | Insert Screw | Torx Driver | Clamping Bolt For Cartridge | For Drill |
|---|---|---|---|---|---|---|
| STC-V5055N | STC-V5055T | SPMX-090408 | TSB-35090 | T-15 | M0512BH-W | STD-V5055..D |
| STC-V5560N | STC-V5560T | | | | | STD-V5560..D |
| STC-V6065N | STC-V6065T | SPMX-110408 | TSB-40100 | | | STD-V6065..D |
| STC-V6570N | STC-V6570T | | | | M0614HC-W | STD-V6570..D |
| STC-V7075N | STC-V7075T | | | | | STD-V7075..D |
| STC-V7580N | STC-V7580T | SPMX-140512 | TSB-50125 | T-20 | | STD-V7580..D |

※ 동일바디에 교환용 카트리지로 5mm범위 조절 가능합니다.(개별카트리지) 예 : STD-657040D(ø65~ø70 사용가능)
※ Adjustable within 5mm by exchangeable cartridge on the same drill body.(ex : STD-657040D(ø65~ø70 available)

| Inner | Outer | Insert | Insert Screw | Driver | Clamping Bolt For Cartridge | Adjust Screw | For Drill |
|---|---|---|---|---|---|---|---|
| STC-5055N | STC-5051T | SPMX-090408 | TSB-35090 | T-15 | M0512BH-W | M0306SS | STD-5055..D |
| | STC-5152T | | | | | | |
| | STC-5253T | | | | | | |
| | STC-5354T | | | | | | |
| | STC-5455T | | | | | | |
| STC-5560N | STC-5556T | | | | | | STD-5060..D |
| | STC-5657T | | | | | | |
| | STC-5758T | | | | | | |
| | STC-5859T | | | | | | |
| | STC-5960T | | | | | | |
| STC-6065N | STC-6061T | SPMX-110408 | TSB-40100 | | | | STD-6065..D |
| | STC-6162T | | | | | | |
| | STC-6263T | | | | | | |
| | STC-6364T | | | | | | |
| | STC-6465T | | | | | | |
| STC-6570N | STC-6566T | | | | M0614HC-W | | STD-6570..D |
| | STC-6667T | | | | | | |
| | STC-6768T | | | | | | |
| | STC-6869T | | | | | | |
| | STC-6970T | | | | | | |
| STC-7075N | STC-7071T | | | | | | STD-7075..D |
| | STC-7172T | | | | | | |
| | STC-7273T | | | | | | |
| | STC-7374T | | | | | | |
| | STC-7475T | | | | | | |
| STC-7580N | STC-7576T | SPMX-140512 | TSB-50125 | T-20 | | M04088SS | STD-7580..D |
| | STC-7677T | | | | | | |
| | STC-7778T | | | | | | |
| | STC-7879T | | | | | | |
| | STC-7980T | | | | | | |

※ STC-V 카트리지와 STC카트리지는 서로 호환되지 않습니다.
※ It is not compatible with STC-V and STC

| Inner | Outer | Insert | Insert Screw | Torx Driver | Clamping Bolt For Cartridge | For Drill |
|---|---|---|---|---|---|---|
| VLC-410450N | VLC-000410T | WCMX06T308 | TSB-35078 | T-15 | M0510HC-W | VLT(VSD)-4145..D |
| | VLC-000420T | | | | | |
| | VLC-000430T | | | | | |
| | VLC-000440T | | | | | |
| | VLC-000450T | | | | | |
| VLC-460500N | VLC-000460T | | | | | VLT(VSD)-4650..D |
| | VLC-000470T | | | | | |
| | VLC-000480T | | | | | |
| | VLC-000490T | | | | | |
| | VLC-000500T | | | | | |
| VLC-510550N | VLC-000510T | WCMX080408 | TSB-40110 | | M0614HC-W | VLT(VSD)-5155..D |
| | VLC-000520T | | | | | |
| | VLC-000530T | | | | | |
| | VLC-000540T | | | | | |
| | VLC-000550T | | | | | |
| VLC-560590N | VLC-000560T | | | | | VLT(VSD)-5659..D |
| | VLC-000570T | | | | | |
| | VLC-000580T | | | | | |
| | VLC-000590T | | | | | |

※ 1mm단위 개별 카트리지 사용으로 직경을 조절합니다.
※ Adjustable 1mm unit when you replace individual outer cartridge(1mm)

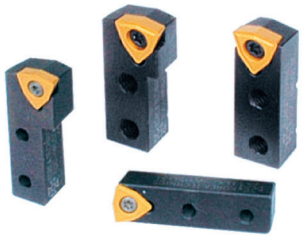

| Inner | Outer | Insert | Insert Screw | Torx Driver | Clamping Bolt For Cartridge | For Drill |
|---|---|---|---|---|---|---|
| TDC-W0503N | TDC-W0503T | WCMX050308 | TSB-30070 | T-8 | M0412BH-W | TPD-040..D~TPD-055..D |
| TDC-W06T3N | TDC-W06T3T | WCMX06T308 | TSB-35090 | T-15 | M0616HC-W | TPD-060..D~TPD-110..D |

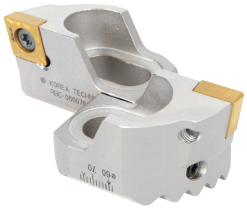

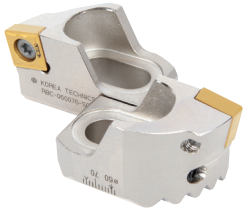

## ▶ RBC-CC

| Group | Code No. | Insert | 미세조정볼트(M) | Screw | Driver | For Head |
|---|---|---|---|---|---|---|
| EMS25 | RBC-028036-CC06 | CCMT060204 | M0306SS | TSB-25055 | T-8 | RBH-251437 |
| EMS32 | RBC-036047-CC06 | | M0408SS | | | RBH-321844 |
| EMS40 | RBC-047060-CC09 | CCMT09T308 | M0410SS | TSB-35080 | T-15 | RBH-402250 |
| EMS50 | RBC-060076-CC12 | CCMT120408 | M0514SS | TSB-50125 | T-20 | RBH-502855 |
| EMS63 | RBC-076098-CC12 | | M0515SS | | | RBH-633660 |
| EMS80 | RBC-098125-CC12 | | M0620SS | | | RBH-804576 |

## ▶ RBC-SC

| Group | Code No. | Insert | 미세조정볼트(M) | Screw | Driver | For Head |
|---|---|---|---|---|---|---|
| EMS25 | RBC-028036-SC06 | SCMT060204 | M0306SS | TSB-25055 | T-8 | RBH-251437 |
| EMS32 | RBC-036047-SC06 | | M0408SS | | | RBH-321844 |
| EMS40 | RBC-047060-SC09 | SCMT09T308 | M0410SS | TSB-35080 | T-15 | RBH-402250 |
| EMS50 | RBC-060076-SC12 | SCMT120408 | M0514SS | TSB-50125 | T-20 | RBH-502855 |
| EMS63 | RBC-076098-SC12 | | M0515SS | | | RBH-633660 |
| EMS80 | RBC-098125-SC12 | | M0620SS | | | RBH-804576 |

## ● Construction System of Screw's Code No.

| Code No. | Shape | Designation | Code No. | Shape | Designation |
|---|---|---|---|---|---|
| M□□□□BH | | 버튼헤드 스크류<br>Button Head Screw | M□□□□BH-W | | 버튼헤드 스크류+와샤<br>Button Head Screw+Washer |
| M□□□□HC | | 헤드캡 스크류<br>Headcap Screw | M□□□□HC-W | | 헤드캡 스크류+와샤<br>Headcap Screw +Washer |
| M□□□□SS | | 셋트 스크류<br>Set Screw | M□□□□SS-H | | 셋트 스크류 홀관통<br>Set Screw Hole |
| M□□□□CP | | 콘포인트 스크류<br>Cornpoint Screw | M □ □ □ □ □ □ - □<br>M size / Lenght / Shape / Note(etc.) | | |

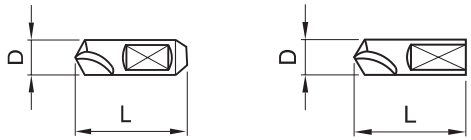


| Code No. | D | L | For Drill |
|---|---|---|---|
| PLD-V0630 TiN | 6 | 30 | VLT, TSD, TMD |
| PLD-V0835 TiN | 8 | 35 | VLT, TSD, TMD |
| PLD-V1035 TiN-H | 10 | 35 | VMD, VLT, MXD, TSD, TMD |
| PLD-V1238 TiN-H | 12 | 38 | VMD, VLT, MXD, TSD, TMD |
| PLD-V1645 TiN-H | 16 | 45 | VMD, VLT, MXD, TSD, TMD |
| PLD-2045 TiN-H | 20 | 45 | VMD, MXD |
| PLD-2556 TiN-H | 25 | 56 | VMD, MXD |
| PLD-3068 TiN-H | 30 | 68 | VMD, MXD |
| PLD-0620 TiN | 6 | 20 | VSD, FXD |
| PLD-0825 TiN | 8 | 25 | VSD, FXD |
| PLD-1030 TiN-H | 10 | 30 | VSD, FXD |
| PLD-1236 TiN-H | 12 | 36 | VSD |
| PLD-1642 TiN-H | 16 | 42 | VSD |

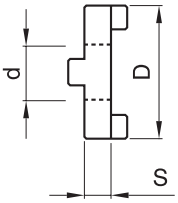


| Code No. | D | d | S |
|---|---|---|---|
| DVR-281310 | 28 | 13 | 10 |
| DVR-321610 | 32 | 16 | |
| DVR-402212 | 40 | 22 | 12 |
| DVR-482712 | 48 | 27 | |
| DVR-583214 | 58 | 32 | 14 |
| DVR-704014 | 70 | 40 | |
| DVR-805016 | 80 | 50 | 16 |

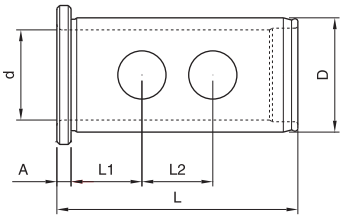


| Code No. | D | d | L | L1 | L2 | A |
|---|---|---|---|---|---|---|
| DSL-322065 | 32 | 20 | 65 | 20 | – | 5 |
| DSL-322565 | 32 | 25 | 65 | 20 | 20 | |
| DSL-402075 | 40 | 20 | 75 | 20 | – | |
| DSL-402575 | 40 | 25 | 75 | 20 | 25 | |
| DSL-403275 | 40 | 32 | 75 | 20 | 25 | |
| DSL-502095 | 50 | 20 | 95 | 35 | – | |
| DSL-502595 | 50 | 25 | 95 | 35 | – | |
| DSL-503295 | 50 | 32 | 95 | 35 | 35 | |
| DSL-504095 | 50 | 40 | 95 | 35 | 35 | |

※ 드릴 슬리브(DSL)는 Weldon-B 타입 사이드락 아버(84~90페이지)와는 호환이 되지 않습니다.
※ Drill Sleeve(DSL) is not compatible with the Weldon-B type Side lock Arbor.(P.84~90)

# PULL STUD BOLT / DRIVERS

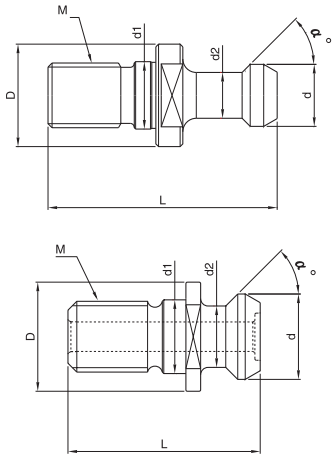


| Code No. | D | d | d1 | d2 | M | L1 | L | α° |
|---|---|---|---|---|---|---|---|---|
| PSB-40-1 | 23 | 15 | 17 | 10 | M16 | 29 | 60 | 45° |
| PSB-40-2 | 23 | 15 | 17 | 10 | M16 | 29 | 60 | 60° |
| PSB-40-3 | 23 | 15 | 17 | 10 | M16 | 29 | 60 | 90° |
| PS-G51 | 22 | 18.796 | 17 | 12.446 | M16 | 19.106 | 44.106 | 45° |
| PSB-50-1 | 38 | 23 | 25 | 17 | M24 | 45 | 85 | 45° |
| PSB-50-2 | 38 | 23 | 25 | 17 | M24 | 45 | 85 | 60° |
| PSB-50-3 | 38 | 23 | 25 | 17 | M24 | 45 | 85 | 90° |
| PS-G41 | 37 | 28.956 | 25 | 20.828 | M24 | 25.2 | 65.2 | 45° |

| | |
|---|---|
| TXL-6<br>TXL-8<br>TXL-15<br>TXL-20 | |
| TXL-15<br>TXL-20 | |
| TXL-20<br>TXL-25<br>TXL-30 | |
| TXL-15<br>TXL-20 | |

# CLAMPING SCREW FOR INDEXABLE INSERTS

| | | Code No. | Description | Driver | Note |
|---|---|---|---|---|---|
| | DRILL & BORING | TSB-18045 | M 1.8×4.5 | T-6 | |
| | | TSB-20045 | M 2.0×4.5 | T-6 | |
| | | TSB-22045 | M 2.2×4.5 | T-6 | |
| | | TSB-22052 | M 2.2×5.2 | T-6 | |
| | | TSB-25055 | M 2.5×5.5 | T-8 | |
| | | TSB-25065 | M 2.5×6.5 | T-8 | |
| | | TSB-30070 | M 3.0×7.0 | T-8 | |
| | | TSB-30072 | M 3.0×7.2 | T-8 | KSD(ø24~ø29.5) |
| | | TSB-35078 | M 3.5×7.8 | T-15 | VLT(ø41~ø59) |
| | | TSB-35080 | M 3.5×8.0 | T-15 | KSD, Boring Tool |
| | | TSB-35090 | M 3.5×9.0 | T-15 | |
| | | TSB-40100 | M 4.0×10.0 | T-15 | |
| | | TSB-40110 | M 4.0×11.0 | T-15 | |
| | | TSB-50125 | M 5.0×12.5 | T-20 | |
| | CUTTER | CSB-6012 | M 6.0×12.0 | 4 | |
| | | CSB-8012 | M 8.0×12.0 | 5 | |
| | | CSB-8018 | M 8.0×18.0 | 6 | |
| 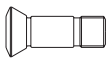 | BALL NOSE CUTTER | TSB-319 | M 4.0×8.0 | T-15 | |
| | | TSB-243 | M 5.0×11.0 | T-20 | |
| | | TSB-390 | M 4.0×8.5 | T-15 | |
| 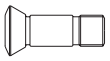 | FINISHING BALL CUTTER | TSB-391 | M 5.0×9.0 | T-20 | |
| | | TSB-392 | M 5.0×13.0 | T-20 | |
| | | TSB-393 | M 5.0×15.5 | T-20 | |
| | | TSB-394 | M 6.0×20.5 | T-20 | |
| | | TSB-395 | M 8.0×25.0 | T-30 | |
| 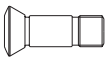 | FINISHING BALL CUTTER | TSB-5114 | M 4.0×13.0 | T-15 | |
| | | TSB-5214 | M 5.0×16.0 | T-15 | |
| | | TSB-5314 | M 6.0×21.0 | T-20 | |
| | | TSB-5414 | M 8.0×25.0 | T-20 | |
| | FINISHING BALL CUTTER | TSB-5116 | M 3.5×8.5 | T-15 | |
| | | TSB-5216 | M 5.0×10.0 | T-15 | |
| | | TSB-5314 | M 5.0×13.0 | T-20 | |
| | | TSB-5414 | M 6.0×17.5 | T-20 | |
| 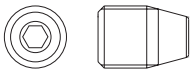 | MODULAR ARBOR | MTB-06085 | M 6.0×8.5 | 3 | |
| | | MTB-08115 | M 8.0×11.5 | 4 | |
| | | MTB-10145 | M 10.0×14.5 | 5 | |
| | | MTB-12175 | M 12.0×17.5 | 6 | |
| | | MTB-16225 | M 16.0×22.5 | 8 | |
| | | MTB-16260 | M 16.0×26.5 | 8 | |
| | SHIM | CST-43 | | | |

# CLAMPING BOLTS FOR VMD

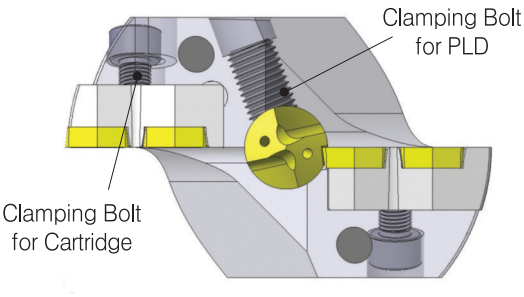


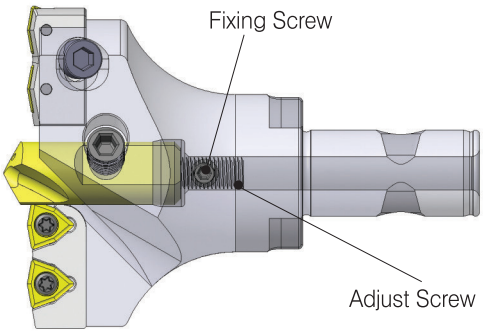


| Code No. | Cartridge | Clamping Bolt For Cartridge | Pilot Drill | Clamping Bolt For PLD | Adjust Screw | Fixing Screw |
|---|---|---|---|---|---|---|
| VMD-045050 | VMD-045050 | M0410BH-W | PLD-V1035TiN-H | M0610SS | M0610SS-H | M0408SS |
| VMD-050055 | VMD-050055 | | | | | |
| VMD-055060 | VMD-055060 | M0512BH-W | PLD-V1238TiN-H | M0812SS | M0815SS-H | M0508SS |
| VMD-060065 | VMD-060065 | | | | | |
| VMD-065070 | VMD-065070 | | | | | |
| VMD-070075 | VMD-070075 | | | M0815SS | | M0510SS |
| VMD-075080 | VMD-075080 | M0612HC-W | PLD-V1645TiN-H | M1015SS | M1015SS-H | M0610SS |
| VMD-080085 | VMD-080085 | M0614HC-W | | | | |
| VMD-085090 | VMD-085090 | M0616HC-W | | M1020SS | M1018SS-H | M0612SS |
| VMD-090095 | VMD-090095 | | | | | |
| VMD-095100 | VMD-095100 | | | | | |
| VMD-100105 | VMD-100105 | M0818HC-W | PLD-2045TiN-H | M1220SS | M1220SS-H | |
| VMD-105100 | VMD-105100 | | | | | |
| VMD-110115 | VMD-110115 | | | | | |
| VMD-115120 | VMD-115120 | M0820HC-W | | M1225SS | M1420SS-H | |
| VMD-120125 | VMD-120125 | M0825HC-W | PLD-2556TiN-H | M1425SS | | M0615SS |
| VMD-125130 | VMD-125130 | | | | | |
| VMD-130135 | VMD-130135 | | | | | |
| VMD-135140 | VMD-135140 | | | | | |
| VMD-140150 | VMD-140150 | | | | | |
| VMD-150160 | VMD-150160 | | | | | |
| VMD-160170 | VMD-160170 | | PLD-3068TiN-H | M1625SS | | M0620SS |
| VMD-170180 | VMD-170180 | | | | | |

# CLAMPING BOLTS FOR VLT

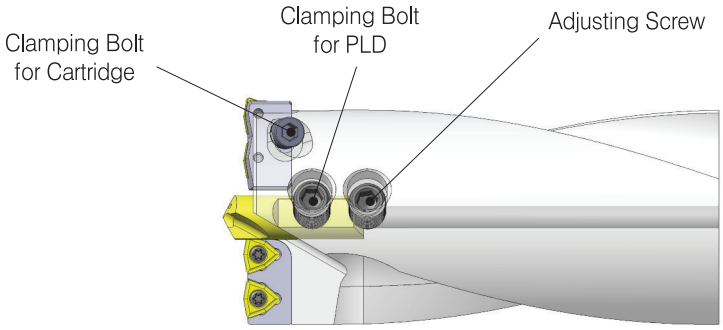


| Code No. | 카트리지 볼트 Cartridge | | | Pilot Drill | | |
|---|---|---|---|---|---|---|
| | 내측 Inner | 외측 Outer | 카트리지 볼트 Clamping Bolt For Cartridge | 센터드릴 Pilot Drill | PLD 볼트 Clamping Bolt For PLD | 조절 볼트 Adjusting Screw |
| VLT~250..D<br>VLT~280..D | – | – | – | PLD-V0630TiN | M0508SS | M0510CP |
| VLT~290..D<br>VLT~300..D | | | | | M0510SS | |
| VLT~310..D<br>VLT~340..D | | | | PLD-V0835TiN | M0610SS | M0610CP |
| VLT~350..D<br>VLT~400..D | | | | | M0612SS | M0616CP |
| VLT-4145..D | VLC-410450N | VLC-000410T | M0510HC-W | PLD-V1035TiN-H | M0812SS | M0812CP |
| | | VLC-000420T | | | | |
| | | VLC-000430T | | | | |
| | | VLC-000440T | | | | |
| | | VLC-000450T | | | | |
| VLT-4650..D | VLC-460500N | VLC-000460T | | | M0815SS | M0816CP |
| | | VLC-000470T | | | | |
| | | VLC-000480T | | | | |
| | | VLC-000490T | | | | |
| | | VLC-000500T | | | | |
| VLT-5155..D | VLC-510550N | VLC-000510T | M0614HC-W | PLD-V1238TiN-H | M1015SS | M1016CP |
| | | VLC-000520T | | | | |
| | | VLC-000530T | | | | |
| | | VLC-000540T | | | | |
| | | VLC-000550T | | | | |
| | | VLC-000560T | | | | |
| VLT-5659..D | VLC-56059N | VLC-000570T | | | | |
| | | VLC-000580T | | | | |
| | | VLC-000590T | | | | |
| | | VLC-000600T | | | | |
| VLT-6065..D | VMC-060065N | VLC-060065T | M0512BH-W | | M1020SS | M1020CP |
| VLT-6570..D | VMC-065070N | VLC-065070T | | | | |
| VLT-7075..D | VMC-070075N | VLC-070075T | | | M1025SS | M1025CP |
| VLT-7580..D | VMC-075080N | VLC-075080T | M0612HC-W | PLD-V1645TiN-H | | |

# CLAMPING BOLTS FOR FXD, STD-V, HSD-V

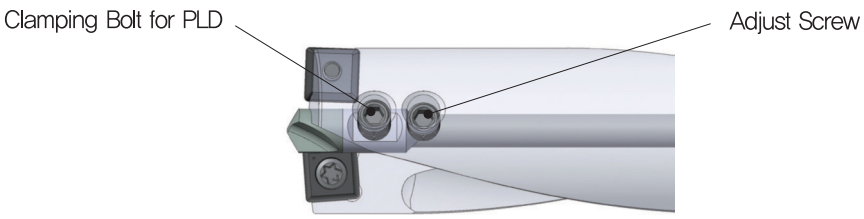


## FXD

| Code No. | 센터드릴 Pilot Drill | | |
|---|---|---|---|
| | 센터드릴 Pilot Drill | PLD 볼트 Clamping Bolt For PLD | 조절 볼트 Adjusting Screw |
| FXD-180..D~FXD-220..D | PLD-0620TiN | M0506SS | M0506CP |
| FXD-225..D~FXD-250..D | | M0508SS | M0508CP |
| FXD-255..D~FXD-300..D | PLD-0825TiN | M0608SS | M0610CP |

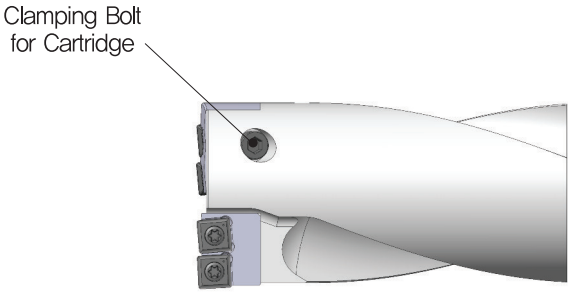


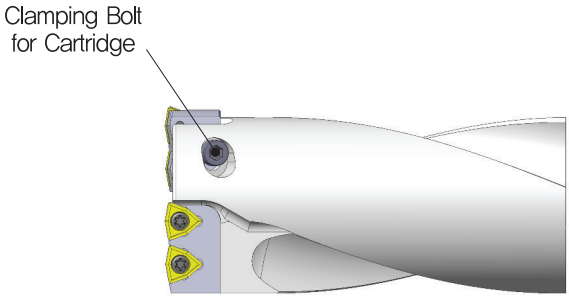


## STD-V

| Code No. | 카트리지 Cartridge | | |
|---|---|---|---|
| | 내측 Inner | 외측 Outer | 카트리지 볼트 Clamping Bolt For Cartridge |
| STD-V5055..D | STC-V5055N | STC-V5055T | M0512BH-W |
| STD-V5560..D | STC-V5560N | STC-V5560T | |
| STD-V6065..D | STC-V6065N | STC-V6065T | |
| STD-V6570..D | STC-V6570N | STC-V6570T | M0614HC-W |
| STD-V7075..D | STC-V7075N | STC-V7075T | |
| STD-V7580..D | STC-V7580N | STC-V7580T | |

## HSD-V

| Code No. | 카트리지 Cartridge | | |
|---|---|---|---|
| | 내측 Inner | 외측 Outer | 카트리지 볼트 Clamping Bolt For Cartridge |
| HSD-V5965..D | HSC-5965N | HSC-5965T | M0512BH-W |
| HSD-V6570..D | HSC-6570N | HSC-6570T | M0614HC-W |
| HSD-V7075..D | HSC-7075N | HSC-7075T | |
| HSD-V7580..D | HSC-7580N | HSC-7580T | |

# TECHNICAL DATA

# 절삭 가공 공식
## Formula for Cutting operations

● 주축 회전수 [min-1]

$$n = \frac{Vc \times 1{,}000}{D \times \pi}$$

● 소요동력 [kW]

$$P_{mot} = \frac{Q \times k_c}{60{,}000 \times \eta}$$

● 절삭속도 [m/min]

$$V_c = \frac{\pi \times D \times n}{1{,}000}$$

● 토르크 [Nm]

$$M_c = \frac{D^2 \times K_c \times f}{8{,}000} = \frac{P_{mot} \times 9{,}500}{n}$$

● 회전당 이송량 [mm]

$$f = f_z \times Z$$

● 이송분력 [N]

$$F_f = 0.63 \times \frac{f \times D \times k_c}{n}$$

● 테이블 이송 속도 [mm/min]

$$V_f = f \times n$$

● 피삭재 배출량 [cm3/min]

$$Q = \frac{V_f \times \pi \times D^2}{4{,}000}$$

- D : 툴 직경(mm)
- n : 회전수(min-1)
- Z : 날수
- f : 이송속도(mm)
- Vc : 절삭속도(m/min)
- Vf : 이송속도(mm/min)
- kc : 피삭재의 특정한 절삭동력(N/mm2) -> kc값은 피삭재그룹(128페이지 참조)
- Pmot : 소요동력(kW)
- Q : 칩 배출량(cm3/min)
- $\eta$ : 기계 가동율(0.7-0.95)
- Mc : 토르크(Nm)
- Ff : 이송분력(N)
- fz : 날당 이송량(mm)

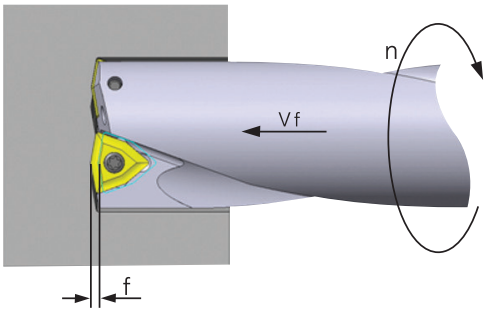

## KSD 절삭조건표 Recommended Cutting Values KSD

| | 재질구분 | Vc (m/min) | 이송 (mm/rev) | | | | |
|---|---|---|---|---|---|---|---|
| | | | ø13~ø16 | ø16.5~ø23.5 | ø24~ø29.5 | ø30~ø42 | ø43~ø60 |
| P 강 Steel | 탄소강 (-0.25%) (Low-alloy steel) | 160-250 | 0.04-0.08 | 0.04-0.08 | 0.04-0.10 | 0.05-0.12 | 0.05-0.14 |
| | 탄소강 (0.25%-) (High-alloy steel) | 140-220 | 0.04-0.10 | 0.04-0.12 | 0.05-0.15 | 0.08-0.18 | 0.10-0.20 |
| | 합금강 (-HB300) (Low-alloy steel) | 120-220 | 0.04-0.10 | 0.05-0.11 | 0.05-0.12 | 0.06-0.18 | 0.06-0.20 |
| | 합금강 (HB300-) (High-alloy steel) | 120-180 | 0.04-0.12 | 0.05-0.12 | 0.07-0.16 | 0.08-0.18 | 0.08-0.20 |
| M 스테인레스강 Stainless steel | 스테인레스강 Stainless steel | 130-220 | 0.04-0.10 | 0.04-0.12 | 0.05-0.14 | 0.06-0.16 | 0.06-0.18 |
| K 주철 Cast iron | 회주철 Grey cast iron | 150-250 | 0.04-0.10 | 0.05-0.14 | 0.05-0.17 | 0.08-0.20 | 0.08-0.25 |
| | 구상흑연주철 Cast iron with nodular cast iron | 100-200 | 0.04-0.10 | 0.04-0.12 | 0.05-0.14 | 0.06-0.15 | 0.06-0.18 |
| S 티타늄 합금강 Super-alloys and titanium | 티탄 합금 Super-alloys and titanium | 30-90 | 0.04-0.08 | 0.04-0.08 | 0.04-0.11 | 0.07-0.12 | 0.08-0.15 |

## HSD-V, HSD, SFD 절삭조건표 Recommended Cutting Values For HSD-V, HSD, SFD

| | 재질구분 | Vc (m/min) | 이송 (mm/rev) | | | | | | |
|---|---|---|---|---|---|---|---|---|---|
| | | | ø13~ø15.5 | ø16~ø20 | ø20.5~ø25 | ø25.5~ø30 | ø31~ø41 | ø42~ø58 | ø59~ø80 |
| P 강 Steel | 저탄소강 (-0.25%) (Unalloyed steel) | 180-250 | 0.04-0.08 | 0.05-0.10 | 0.06-0.12 | 0.08-0.14 | 0.08-0.14 | 0.08-0.18 | 0.08-0.12 |
| | 고탄소강 (0.25%-) (Low-alloy steel) | 150-220 | 0.05-0.08 | 0.06-0.12 | 0.07-0.14 | 0.08-0.18 | 0.12-0.22 | 0.12-0.25 | 0.10-0.18 |
| | 경합금강 (-HB300) (Low-alloy steel) | 120-220 | 0.05-0.08 | 0.06-0.10 | 0.07-0.14 | 0.08-0.18 | 0.10-0.20 | 0.12-0.24 | 0.10-0.18 |
| | 고합금강 (HB300-) (High-alloy steel) | 130-200 | 0.05-0.08 | 0.06-0.10 | 0.07-0.15 | 0.08-0.18 | 0.10-0.20 | 0.12-0.24 | 0.09-0.15 |
| M 스테인레스강 Stainless steel | 스테인레스강 Stainless steel | 150-220 | 0.04-0.08 | 0.05-0.09 | 0.06-0.12 | 0.07-0.13 | 0.08-0.16 | 0.10-0.20 | 0.08-0.15 |
| K 주철 Cast iron | 회주철 Grey cast iron | 150-250 | 0.05-0.11 | 0.08-0.13 | 0.10-0.15 | 0.12-0.20 | 0.15-0.26 | 0.18-0.30 | 0.12-0.20 |
| | 구상흑연주철 Cast iron with nodular cast | 120-200 | 0.05-0.10 | 0.06-0.12 | 0.08-0.14 | 0.10-0.18 | 0.14-0.24 | 0.15-0.25 | 0.10-0.18 |
| N 비철금속 Nonferrous metals | 알루미늄 단조강 Aluminium forging alloys | 300-380 | 0.04-0.06 | 0.05-0.07 | 0.06-0.08 | 0.07-0.10 | 0.10-0.13 | 0.12-0.20 | 0.10-0.16 |
| | 알루미늄 주물강 Aluminium cast alloys | 260-330 | 0.04-0.06 | 0.05-0.07 | 0.06-0.08 | 0.07-0.10 | 0.10-0.15 | 0.12-0.20 | 0.10-0.16 |
| S 티타늄 합금강 Super-alloys and titanium | 티타늄 합금강 Super-alloys and titanium | 40-80 | 0.03-0.05 | 0.04-0.06 | 0.04-0.07 | 0.05-0.08 | 0.06-0.10 | 0.07-0.13 | 0.06-0.10 |

## STD-V, STD 절삭조건표 Recommended Cutting Values For STD-V, STD

| | 재질구분 | Vc (m/min) | 이송 (mm/rev) | | | | | | | | |
|---|---|---|---|---|---|---|---|---|---|---|---|
| | | | ø12.5~ø15 | ø15.5~ø21.5 | ø22~ø27.5 | ø28~ø33 | ø34~ø41 | ø42~ø50 | ø50~ø60 | ø60~ø75 | ø75~ø80 |
| P 강 Steel | 저탄소강 (-0.25%) (Unalloyed steel) | 180-240 | 0.05-0.08 | 0.06-0.10 | 0.06-0.12 | 0.07-0.13 | 0.08-0.15 | 0.08-0.16 | 0.06-0.12 | 0.08-0.12 | 0.08-0.12 |
| | 고탄소강 (0.25%-) (Low-alloy steel) | 150-220 | 0.06-0.12 | 0.08-0.15 | 0.10-0.17 | 0.12-0.20 | 0.12-0.22 | 0.13-0.24 | 0.10-0.14 | 0.12-0.16 | 0.11-0.18 |
| | 경합금강 (-HB300) (Low-alloy steel) | 130-200 | 0.06-0.12 | 0.08-0.14 | 0.10-0.18 | 0.12-0.20 | 0.12-0.20 | 0.12-0.22 | 0.08-0.15 | 0.10-0.16 | 0.10-0.18 |
| | 고합금강 (HB300-) (High-alloy steel) | 120-180 | 0.06-0.10 | 0.08-0.15 | 0.10-0.18 | 0.12-0.20 | 0.12-0.22 | 0.13-0.24 | 0.08-0.14 | 0.09-0.14 | 0.09-0.12 |
| M 스테인레스강 Stainless steel | 스테인레스강 Stainless steel | 150-220 | 0.05-0.10 | 0.06-0.12 | 0.08-0.15 | 0.09-0.16 | 0.10-0.17 | 0.11-0.18 | 0.06-0.13 | 0.08-0.15 | 0.08-0.14 |
| K 주철 Cast iron | 회주철 Grey cast iron | 150-250 | 0.06-0.12 | 0.08-0.16 | 0.12-0.20 | 0.14-0.25 | 0.15-0.28 | 0.17-0.30 | 0.12-0.18 | 0.15-0.18 | 0.15-0.20 |
| | 구상흑연주철 Cast iron with nodular cast | 120-200 | 0.06-0.10 | 0.08-0.15 | 0.10-0.18 | 0.12-0.20 | 0.14-0.22 | 0.16-0.24 | 0.10-0.15 | 0.09-0.17 | 0.10-0.18 |
| N 비철금속 Nonferrous metals | 알루미늄 Aluminium | 300-380 | 0.06-0.14 | 0.08-0.15 | 0.10-0.20 | 0.12-0.22 | 0.14-0.23 | 0.15-0.24 | 0.14-0.20 | 0.14-0.22 | 0.15-0.22 |
| S 티타늄 합금강 Super-alloys and titanium | 티탄 합금 Super-alloys and titanium | 30-60 | 0.05-0.10 | 0.06-0.14 | 0.08-0.18 | 0.10-0.20 | 0.11-0.20 | 0.12-0.22 | 0.10-0.15 | 0.1-0.15 | 0.1-0.15 |

## VLT, VSD, TSD 절삭조건표 Recommended Cutting Values For VLT, VSD, TSD

| | 재질구분 | Vc (m/min) | 이송 (mm/rev) | | | | | | |
|---|---|---|---|---|---|---|---|---|---|
| | | | ø25 | ø26~ø30 | ø31~ø40 | ø41~ø50 | ø51~ø59 | ø60~ø75 | ø75~ø80 |
| P 강 Steel | 탄소강 (-0.25%) (Low-alloy steel) | 130-190 | 0.06-0.10 | 0.07-0.11 | 0.08-0.12 | 0.0.8-0.14 | 0.10-0.18 | 0.08-0.12 | 0.1-0.14 |
| | 탄소강 (0.25%-) (High-alloy steel) | 130-190 | 0.06-0.1 | 0.07-0.11 | 0.08-0.12 | 0.1-0.14 | 0.12-0.18 | 0.08-0.12 | 0.1-0.14 |
| | 합금강 (-HB300) (Low-alloy steel) | 100-140 | 0.06-0.1 | 0.07-0.11 | 0.08-0.12 | 0.1-0.14 | 0.12-0.18 | 0.08-0.12 | 0.1-0.14 |
| | 합금강 (HB300-) (High-alloy steel) | 60-100 | 0.05-0.07 | 0.05-0.07 | 0.06-0.08 | 0.06-0.1 | 0.09-0.13 | 0.06-0.08 | 0.06-0.1 |
| M 스테인레스강 Stainless steel | 스테인레스강 Stainless steel | 60-110 | 0.04-0.07 | 0.04-0.11 | 0.06-0.12 | 0.08-0.14 | 0.1-0.18 | 0.06-0.12 | 0.08-0.14 |
| K 주철 Cast iron | 회주철 Grey cast iron | 130-190 | 0.07-0.13 | 0.07-0.15 | 0.08-0.16 | 0.1-0.18 | 0.12-0.22 | 0.08-0.16 | 0.1-0.18 |
| | 구상흑연주철 Cast iron with nodular cast iron | 110-190 | 0.04-0.13 | 0.07-0.15 | 0.08-0.16 | 0.1-0.25 | 0.12-0.26 | 0.08-0.16 | 0.1-0.25 |
| N 비철금속 Nonferrous metals | 알루미늄 단조강 Aluminium forging alloys | 200-300 | 0.04-0.06 | 0.07-0.12 | 0.08-0.13 | 0.09-0.15 | 0.12-0.2 | 0.08-0.13 | 0.09-0.15 |
| | 알루미늄 주물강 Aluminium cast alloys | 140-300 | 0.04-0.06 | 0.06-0.12 | 0.08-0.13 | 0.09-0.15 | 0.12-0.2 | 0.08-0.13 | 0.09-0.15 |

## VMD, MXD 절삭조건표 Recommended Cutting Values For VMD, MXD

| | 재질구분 | Vc (m/min) | 이송 (mm/rev) | | | | | | |
|---|---|---|---|---|---|---|---|---|---|
| | | | ø45~ø55 | ø55~ø60 | ø60~ø75 | ø75~ø100 | ø100~ø105 | ø105~ø150 | ø150~ø180 |
| P 강 Steel | 탄소강 (-0.25%) (Low-alloy steel) | 120-180 | 0.06-0.10 | 0.07-0.11 | 0.08-0.12 | 0.08-0.14 | 0.08-0.18 | 0.08-0.12 | 0.10-0.14 |
| | 탄소강 (0.25%-) (High-alloy steel) | 110-170 | 0.06-0.10 | 0.07-0.11 | 0.08-0.12 | 0.10-0.14 | 0.10-0.18 | 0.08-0.12 | 0.10-0.14 |
| | 합금강 (-HB300) (Low-alloy steel) | 90-130 | 0.06-0.10 | 0.07-0.11 | 0.08-0.12 | 0.10-0.14 | 0.12-0.18 | 0.08-0.12 | 0.10-0.14 |
| | 합금강 (HB300-) (High-alloy steel) | 60-100 | 0.05-0.07 | 0.05-0.07 | 0.06-0.08 | 0.06-0.10 | 0.09-0.13 | 0.06-0.08 | 0.06-0.10 |
| M 스테인레스강 Stainless steel | 스테인레스강 Stainless steel | 60-110 | 0.04-0.07 | 0.04-0.11 | 0.06-0.12 | 0.08-0.14 | 0.10-0.18 | 0.06-0.12 | 0.08-0.14 |
| K 주철 Cast iron | 회주철 Grey cast iron | 120-180 | 0.07-0.13 | 0.07-0.15 | 0.08-0.16 | 0.10-0.18 | 0.12-0.22 | 0.08-0.16 | 0.10-0.18 |
| | 구상흑연주철 Cast iron with nodular cast iron | 100-180 | 0.04-0.13 | 0.07-0.15 | 0.08-0.16 | 0.10-0.25 | 0.12-0.26 | 0.08-0.16 | 0.10-0.25 |
| N 비철금속 Nonferrous metals | 알루미늄 단조강 Aluminium forging alloys | 180-280 | 0.04-0.06 | 0.07-0.12 | 0.08-0.13 | 0.09-0.15 | 0.12-0.20 | 0.08-0.13 | 0.09-0.15 |
| | 알루미늄 주물강 Aluminium cast alloys | 120-270 | 0.04-0.06 | 0.06-0.12 | 0.08-0.13 | 0.09-0.15 | 0.12-0.20 | 0.08-0.13 | 0.09-0.15 |

## 피삭재 그룹표 Workpiece Group

| ISO | 피삭재 Material Group | 피삭재 조건 Composition | | 인장강도(N/㎟) Tensile Strength | 경도(HB/HRC) Hardness | 피삭재 그룹 Cutting Groups | 절삭동력(N/㎟) Kc값(Values) |
|---|---|---|---|---|---|---|---|
| P 강 Steel | 일반강(alloy steel) 주강(cast seel) 기계구조강 (machining steel) | 〈0.25% C | annealed | 420 | 125 | 1 | 2000 |
| | | 〉=0.25%C | annealed | 650 | 190 | 2 | 2100 |
| | | 〈0.55% C | tempered | 850 | 250 | 3 | 2150 |
| | | 〉=0.55%C | annealed | 750 | 220 | 4 | 2200 |
| | | | tempered | 1000 | 300 | 5 | 2200 |
| | 경합금강,주강(〈5%) (Low-alloy steeL) | | annealed | 600 | 200 | 6 | 2100 |
| | | | tempered | 930 | 275 | 7 | 2100 |
| | | | | 1000 | 300 | 8 | 2100 |
| | | | | 1200 | 350 | 9 | 2100 |
| | 고합금강, 공구강 (High-alloy steel) | | annealed | 680 | 200 | 10 | 2500 |
| | | | tempered | 1100 | 325 | 11 | 3250 |
| M 스테인레스강 Stainless steel | Stainless steel 스테인레스강 | | martensitic/ferrit | 680 | 200 | 12 | 2300 |
| | | | martensitic | 820 | 240 | 13 | 2800 |
| | | | austenitic | 600 | 180 | 14 | 2600 |
| K 주철 Cast iron | 회주철 Grey cast iron | | pearlitic/ferrit | | 180 | 15 | 1100 |
| | | | pearlitic | | 260 | 16 | 1300 |
| | 구상흑연주철 Cast iron with nodular cast iron | | ferritisc | | 160 | 17 | 1100 |
| | | | pearlitic | | 250 | 18 | 1800 |
| | 가단주철 Malleable cast iron | | ferritisc | | 130 | 19 | 900 |
| | | | pearlitic | | 230 | 20 | 1000 |
| N 비철금속 Nonferrous metals | 알루미늄 단조강 Aluminum Forging alloys | | not heat treatable | | 60 | 21 | 500 |
| | | | heat treatable | | 100 | 22 | 800 |
| | 알루미늄 주물강 Aluminum Cast alloys | 〈=12% Si | not heat treatable | | 75 | 23 | 800 |
| | | | heat treatable | | 90 | 24 | |
| | | 〉12% Si | not heat treatable | | 130 | 25 | |
| | 구리 합금강 Copper and copper alloys | 〉1% Pb | machining alloys | | 110 | 26 | 700 |
| | | | CuZn, CuSnZn | | 90 | 27 | 700 |
| | | | Cu, lead-fr | | 100 | 28 | 1700 |
| S 티타늄 합금강 Super-alloys and titanium | 고온 합금 Heat-resistant alloy | Fe-based | annealed | | 200 | 31 | 3000 |
| | | | heat treatable | | 280 | 32 | 3100 |
| | | Ni-od. Co-based | annealed | | 250 | 33 | 3300 |
| | | | heat treatable | | 350 | 34 | 3300 |
| | | | cast | | 320 | 35 | 3200 |
| | 티탄 합금 Titanium alloys | Pure titanium | | RM 400 | | 36 | 1700 |
| | | $\alpha-\beta$ alloys | | RM 1050 | | 37 | 1700 |

## 경도환산표 Hardness Comparison Table

| 인장강도 Rm, N/㎟ | 비커스 경도 HV | 브리넬 경도 HB | 록웰경도 HRC |
|---|---|---|---|
| 255 | 80 | 76.0 | |
| 270 | 85 | 80.7 | |
| 285 | 90 | 85.5 | |
| 305 | 95 | 90.2 | |
| 320 | 100 | 95.0 | |
| 335 | 105 | 99.8 | |
| 350 | 110 | 105 | |
| 370 | 115 | 109 | |
| 385 | 120 | 114 | |
| 400 | 125 | 119 | |
| 415 | 130 | 124 | |
| 430 | 135 | 128 | |
| 450 | 140 | 133 | |
| 465 | 145 | 138 | |
| 480 | 150 | 143 | |
| 495 | 155 | 147 | |
| 510 | 160 | 152 | |
| 530 | 165 | 156 | |
| 545 | 170 | 162 | |
| 560 | 175 | 166 | |
| 575 | 180 | 171 | |
| 595 | 185 | 176 | |
| 610 | 190 | 181 | |
| 625 | 195 | 185 | |
| 640 | 200 | 190 | |
| 660 | 205 | 195 | |
| 675 | 210 | 199 | |
| 690 | 215 | 204 | |
| 705 | 220 | 209 | |
| 720 | 225 | 214 | |
| 740 | 230 | 219 | |
| 755 | 235 | 223 | |
| 770 | 240 | 228 | 20.3 |
| 785 | 245 | 233 | 21.3 |
| 800 | 250 | 238 | 22.2 |
| 820 | 255 | 242 | 23.1 |
| 835 | 260 | 247 | 24.0 |
| 850 | 265 | 252 | 24.8 |
| 865 | 270 | 257 | 25.6 |
| 880 | 275 | 261 | 26.4 |
| 900 | 280 | 266 | 27.1 |
| 915 | 285 | 271 | 27.8 |
| 930 | 290 | 276 | 28.5 |
| 950 | 295 | 280 | 29.2 |
| 965 | 300 | 285 | 29.8 |
| 995 | 310 | 295 | 31.0 |
| 1030 | 320 | 304 | 32.2 |
| 1060 | 330 | 314 | 33.3 |
| 1095 | 340 | 323 | 34.4 |
| 1125 | 350 | 333 | 35.5 |
| 1155 | 360 | 342 | 36.6 |
| 1190 | 370 | 352 | 37.7 |
| 1220 | 380 | 361 | 38.8 |
| 1255 | 390 | 371 | 39.8 |
| 1290 | 400 | 380 | 40.8 |
| 1320 | 410 | 390 | 41.8 |
| 1350 | 420 | 399 | 42.7 |
| 1385 | 430 | 409 | 43.6 |

| 인장강도 Rm, N/㎟ | 비커스 경도 HV | 브리넬 경도 HB | 록웰경도 HRC |
|---|---|---|---|
| 1420 | 440 | 418 | 44.5 |
| 1455 | 450 | 428 | 45.3 |
| 1485 | 460 | 437 | 46.1 |
| 1520 | 470 | 447 | 46.9 |
| 1555 | 480 | [456] | 47.7 |
| 1595 | 490 | [466] | 48.4 |
| 1630 | 500 | [475] | 49.1 |
| 1665 | 510 | [485] | 49.8 |
| 1700 | 520 | [494] | 50.5 |
| 1740 | 530 | [504] | 51.1 |
| 1775 | 540 | [513] | 51.7 |
| 1810 | 550 | [523] | 52.3 |
| 1845 | 560 | [532] | 53.0 |
| 1880 | 570 | [542] | 53.6 |
| 1920 | 580 | [551] | 54.1 |
| 1955 | 590 | [561] | 54.7 |
| 1995 | 600 | [570] | 55.2 |
| 2030 | 610 | [580] | 55.7 |
| 2070 | 620 | [589] | 56.3 |
| 2105 | 630 | [599] | 56.8 |
| 2145 | 640 | [608] | 57.3 |
| 2180 | 650 | [618] | 57.8 |
| | 660 | | 58.3 |
| | 670 | | 58.8 |
| | 680 | | 59.2 |
| | 690 | | 59.7 |
| | 700 | | 61.1 |
| | 720 | | 61.0 |
| | 740 | | 61.8 |
| | 760 | | 62.5 |
| | 780 | | 63.3 |
| | 800 | | 64.0 |
| | 820 | | 64.7 |
| | 840 | | 65.3 |
| | 860 | | 65.9 |
| | 880 | | 66.4 |
| | 900 | | 67.0 |
| | 920 | | 67.5 |
| | 940 | | 68.0 |

| 인장강도 | N/㎟ | Rm |
|---|---|---|
| 비커스경도 | 다이아몬드 피라미드 136º<br>측정힘 F ≥98 NN/㎟ | HV |
| 브리넬경도<br>산출값:<br>HB=0,95*HV | 0,102*F/D = 30 N/㎟<br>F=측정힘(N)<br>D=측정 추 직경(mm) | HB |
| 록웰경도 C | 다이아몬드 콘 120º<br>전체 측정 힘 1471 ±9N | HRC |

## 재질구분표 Comparison of Work-Piece

| ISO | Korea KS | United Kongdom BS | America AIS/SAE | German DIN | Spain UNF | Italy UNI | Sweden SS | France AFNOR | Japan JIS |
|---|---|---|---|---|---|---|---|---|---|
| P 강 Steel | SM15C | 080M15 | 1015 | Ck15 | C15K | C16 | 1370 | XC12 | S15C |
| | SM25C | – | 1025 | Ck25 | – | – | – | – | S25C |
| | SM35C | 060A35 | 1035(1037) | Ck35 | – | C36 | 1572 | XC38TS | S35C |
| | SM45C | 080M46 | 1045(1046) | Ck45 | C45K | C45 | 1672 | XC42 | S45C |
| | SM50C | 060A52 | 1049 | Ck50 | – | C53 | 1674 | XC48TS | S50C |
| | SM55C | 070M62 | 1055 | Ck55 | C55K | C5 | – | XC55 | S55C |
| | SM58C | 080A62 | 1060 | Ck58 | – | C60 | 1678 | XC60 | S58C |
| | – | 212M36 | 1140 | 35S20 | F210G | – | 1957 | 35MF4 | – |
| | SCMn1 | 150M28 | 1330 | 28Mn6 | – | – | – | 20M5 | SCMn1 |
| | – | 230M07 | 1215 | 9SMn36 | 12SMn35 | CF9SMN36 | – | S300 | – |
| | SMn438(H) | – | 1355 | 36Mn5 | 36Mn5 | – | 2120 | 40M5 | SMn738(H) |
| | sum22 | 230M07 | 1213 | 9SMn28 | 11SMn28 | CF9SMN28 | 1912 | S250 | sum22 |
| | **Low alloy steels** | | | | | | | | |
| | SNC815 | 655M13 | 3310,3415 | 14NiCr14 | – | – | – | 12NC15 | SNC815(H) |
| | SNC415 | – | 3415 | 14NiCr10 | 15NiCr11 | 16NiCr11 | – | 14NC11 | SNC415(H) |
| | SNC236 | 640A35 | 3435 | 36NiCr6 | – | – | – | 35NC6 | SNC236 |
| | SCM420,SCM430 | 1717DS110 | 41300 | 25CrMo4 | 55Cr3 | 35CrMo(KB) | 2225 | 25CD4 | SM420:SCM430 |
| | SCM432,SCCRM3 | 708A37 | 4137:4135 | 34CrMo4 | 34CrMo4 | 35CrMo4 | 2234 | 35CD4 | SM432:SCCRM3 |
| | SCM415 | – | – | 15CrMo5 | 12CrMo4 | – | 2216 | 12CD4 | SCM415(H) |
| | SCM440 | 708A40 | 4140 | 42CrMo4 | 42CrMo4 | 42CrMo4 | 2244 | 42CD4 | SCM440(H) |
| | SCM440 | 708A37 | 4140:4142 | 41CrMo4 | 42CrMo4 | 41CrMo4 | 2244 | 42CD4TS | SCM440 |
| | – | 820A16 | – | 17CrNiMo6 | 14NiCrMo13 | – | – | 18NCD6 | – |
| | – | 1503-245-420 | 4520 | 16Mo5 | 16Mo5 | 16Mo5 | – | – | – |
| | SCMnH1 | Z120M12 | – | G-X120Mn12 | X120Mn12 | XG120Mn12 | – | Z120M12 | SCMnH/1 |
| | SCr415 | 523M15 | 5015 | 15Cr3 | – | – | – | 12C3 | SCr415(H) |
| | – | (527M20) | 5115 | 16MnCr5 | 16MnCr5 | 16MnCr5 | 2511 | 16MC5 | – |
| | SCr430 | 530A32 | 5130 | 34Cr4 | 35Cr4 | 34Cr4(KB) | – | 32C4 | SCr430(H) |
| | SCr440 | 530M40 | 5140 | 42Cr4 | 42Cr4 | 41Cr4 | – | 42C4 | SCr440(H) |
| | SPS | 735A50 | 6050 | 50CrV4 | 51CrV4 | 50CrV4 | 2230 | 50CA4 | SUP10 |
| | SPS9 | 572M60 | 5155 | 55Cr3 | – | – | – | 55Cr3 | SUP9(A) |
| | – | 905M39 | – | 41CrAlMo7 | 41CrAlMo7 | 41CrAMo7 | 2940 | 40CAD6,12 | – |
| | SNCM220 | 850M20 | 8620 | 21NiCrMo22 | 20NiCrMo2 | 20NiCrMo2 | 2506 | 30NCD2 | SNCM22(H) |
| | SNCM240 | 311-Type7 | 8637,8640 | 40NiCrMo22 | 40NiCrMo2 | 40NiCrMo2(KB) | – | – | SNCM240 |
| | – | 250A53 | 9255 | 55Si7 | 56Si7 | 55Si8 | 2085 | 55S7 | – |
| | – | 816M40 | 9840 | 36CrNiMo4 | 35NiCrMo4 | 38NiCrMo4(KB) | – | 40NCD3 | – |
| | SU2 | 534A99 | 52100 | 100Cr6 | F.131 | 100Cr6 | 2258 | 100C6 | SU2 |
| | SUM22L | – | 12L13 | 9SMnPb28 | 11SMnPb28 | CF9SMnPb28 | 1914 | S250Pb | SUM22L |
| | – | – | 12L14 | -SMnPb36 | 12SMnPb25 | CF9SMnPb36 | 1926 | S300Pb | – |
| | – | 150-620Gr27 | ASTM A182 | 13CrMo44 | 14CrMo45 | 14CrMo45 | – | 15CD3.5 | – |
| | – | 1501-622 | ASTM A182 | 10CrMo910 | TU.H | 12CrMo9,10 | 2218 | 12CD9,10 | – |
| | – | – | ASTM A350LF5 | 14Ni6 | 15Ni6 | 14Ni6 | – | 16N6 | – |
| | – | 1501-240 | ASTM A204Gr.A | 15Mo3 | 16Mo3 | 16Mo3KW | 2912 | 15D3 | – |
| | – | 772M24 | -13CrMo12 | 32CrMo12 | F124.A | 32CrMo12 | 2240 | 30Cd12 | – |
| | **High alloy steels** | | | | | | | | |
| | SDT1 | BD3 | D3 | X210Cr12 | X210Cr12 | X210CrMoV13Ku | – | Z200C12 | SKD1 |
| | STS12 | – | A2 | Z100CnMoV51Z100CdV5 | BA2 | 2260 | Z100CnMoV51 | Z100CnMoV51 | SKD12 |
| | – | – | – | X210CrW12 | X210CrE12 | X215CRW121Ku | 2312 | – | SKD2 |
| | STD61 | BH21 | H21 | X30WCrV9 | X30WCrV9 | X28W09KU | – | Z30WCV9 | SKD5 |
| | – | BH13 | H13 | X40CrMoV51 | X40CrMoV5 | X35CrMoVKU | 2242 | Z40CDV5 | SKS31 |
| | STS31 | – | – | 105WCr6 | 05WCr5 | 3KU | 2140 | 105WC13 | SKS43 |
| | STS43 | BW2 | W210 | 100Vi | – | – | – | Y105V | SKT4 |
| | STF4 | – | L6 | 55NiCrMoV6 | F.520.S | – | – | 55NCDV7 | SUH1 |
| | – | 401S45 | HW3 | X45GrSi93 | F322 | 10WCr6 | – | Z45CS9 | SKH55 |
| | – | – | – | – | – | – | – | – | – |
| | SKH55 | – | – | S6-5-2-5 | HS6-5-2-5 | – | 2723 | Z85WKCV2723 | SKH3 |
| | SKH3 | BT4 | T4 | S18-1-2-5 | HS18-1-1-5 | X78WCo1805KU | – | Z80WKCV | SKH9 |
| | SKH51 | BM2 | M2 | S6-5-2 | HS6-5-2 | X82WCo1805KU | -2722 | Z85WDCV | – |
| | – | – | – | M7 | HS2-9-2 | Z100WCWVHS2-9-2 | 2782 | S2-9-2 | – |
| | SKH2 | BT1 | T1 | S18-0-1 | HS18-0-1 | X75W18Ku | – | Z08WCV | SKH2 |
| | – | BS1 | S1 | 45WCrV7 | 45WCrSi8 | 45WCrV8Ku | 2710 | – | – |

## 재질구분표 Comparison of Work-Piece

| ISO | Korea KS | United Kongdom BS | America AIS/SAE | German DIN | Spain UNF | Italy UNI | Sweden SS | France AFNOR | Japan JIS |
|---|---|---|---|---|---|---|---|---|---|
| M 스테인레스강 Stainless steel | **Austenite range** | | | | | | | | |
| | STS301 | – | 301 | X12CrNi77 | – | 2331 | F.3517 | Z12CN17.07X12CrNi707 | SUS301 |
| | STS303 | – | 303 | X12CrNiS188Z10CNF18.09 | – | 2346 | F.3517 | X10CrNiS18.09 | SUS303 |
| | – | – | 304 | X5CrNi189 | 304S31 | X5CrNi18 | 2332/2333F.3551 | Z6CN18.09 | SUS304 |
| | STS304 | 304S15 | 304 | X5CrNi189 | F.3551 | X5CrNi1810 | 2332 | Z6CN18.09 | SUS304 |
| | STS304L | – | 304L | X2CrNi1911 | 304C12 | 2333 | – | – | SUS304L |
| | SSC16 | – | 304LX2CrNi1819 | Z2CrNi1810 | 304S12 | 2352 | F.3503 | X2CrNi1011 | SCS16 |
| | STS304L | 304S62 | 304LN | Z2CrNiN, 1810 | – | – | 2371 | Z2CN1810 | NSUS304LN |
| | STR31 | – | HW3X45CrSi93 | Z45CrSi93 | 401S45 | – | SF322 | X45CrSi8 | SUH1 |
| | STR309 | – | 309 | X15CrNiSi201 | – | – | – | Z15CNS2012 | SUH309 |
| | STR310 | 310S24 | X12CrNi2521 | F.332 | X60CrNi2520 | 2361 | Z12CN2520 | SUH310 | |
| | STS316 | – | 316 | X5CrNiMo1810 | 346S16 | X5CrNiMo17122347 | F.3543 | Z6CND1711 | SUS316 |
| | STS316LN | – | 316LN | X2CrNiMoN | – | 2375 | X2CND1713 | SUS316LN | SUS316LN |
| | STS316L | – | 316L | X2CrNiMo1812 | – | – | – | – | SUS316L |
| | SSC16 | – | 316LXCrNiMo | Z2cndCND1712 | 316S13 | 2353 | – | X2CrNiMo1712 | SCS16 |
| | – | 320S17 | 316Ti | Z2CND1915 | F.3535 | X6CrNiMoTi1712 | 2350 | Z6VDT17.12 | – |
| | STS317L | – | 317L | X24CrNiMo1816 | 317S12 | 2367 | – | X2CrNiMo1816 | 317L |
| | – | – | X10CrNi | Z6CNDNb | – | – | – | X6CrNiMoMoNb | 318 |
| | – | – | S32304 | "X2CrNiN,234" | – | – | 2327 | Z2CN23-04AZ | – |
| | – | – | S32900 | X8CrNiMo.275 | – | – | 2324 | – | – |
| | – | – | S31803 | X2CrNiMoN | – | – | 2377 | Z2CND22-0503 | – |
| | STS | 351S12 | 321 | X10CrNiTi | F.3553 | X6CrNiTi1811 | 2337 | Z6CNT18.10 | SUS321 |
| | STS347 | – | 347 | X6CrNiNb189 | 347S17 | X6CrNiNb18.112338 | F.3552 | Z6CNNb18.10 | SUS347 |
| | STS12 | BA2 | A2 | Z100CnMoV51 | Z100CnMoV51 | Z100CnMoV51KU | 2260 | Z100CDV5 | SKD12 |
| | **Ferrite range Martensite range** | | | | | | | | |
| | STS403 | 403S17 | 403 | X7Cr13 | F.3110 | X6Cr13 | 2301 | Z6C13 | SUS403 |
| | STS405 | 403S17 | 405 | X10CrAl13 | F.311 | X10CrAl13 | – | Z10C13 | SUS405 |
| | STS410 | 410S21 | 410 | X10Cr13 | F.3401 | I13 | 2302 | Z10C14 | SUS410 |
| | STS420J2 | 420S45 | – | X46Cr13 | F.3405 | X40Cr145 | 2304 | Z4CM | SUS420J2 |
| | STS430 | 430S15 | 430 | X8Cr17 | F.3113 | X8Cr17 | 2320 | ZBC17 | SUS430 |
| | STS430F | – | 430F | X12CrMoS17 | F.3117 | X10CrS17 | 2383 | Z10CF17 | SUS430F |
| | STS431 | 431S29 | 431 | X22CrNi6 | F.33427 | X16CrNi16 | 2321 | Z15CNi6.02 | SUS431 |
| | STS434 | 434S17 | 434 | X6CrMo17 | – | ZX8CrMo17 | 2325 | ZBCD17.01 | SUS434 |
| | STR446 | – | 446 | X10CrA124 | – | X16Cr26 | 2322 | Z10CAC24 | SUH446 |
| | SSC5 | 425C11 | – | X5CrNi134 | – | – | – | Z4CND13.4M | SCS5 |
| | STR35,STR36 | 348S54 | EV8 | X53CrMnNiN219 | – | X53CrMnNiNN | – | Z52CMN21.09 | SUH35,SUH36 |
| | STR4 | 443S65 | HNW6 | X80CrNiSi20 | F.320B | X80CrSiNi20 | – | Z80CSN20.02 | SUH4 |
| | **Heat resistance alloys** | | | | | | | | |
| | HRHC15 | 330C11 | – | G-X40NiCrSi | – | XG50NiCr | – | – | SCH15 |
| | STR330 | – | X12NiCrSi | – | – | – | – | Z12NCS35.16 | SUH330330 |
| | – | 3072-76 | 4676 | NiCu30Al | – | – | – | – | |
| | – | – | 5390A | – | – | – | – | NC22Fed | |
| | – | 3146-3 | 5391 | S-NiCr13A16MoNb | – | – | – | NC12D | |
| | – | HR8 | 5383 | NiCr19Fe19NbMo | – | – | – | NC19rNB | |
| | – | – | 5537C | CoCr20W15Ni | – | – | – | KC20WN | |
| | – | – | 5660 | NiFe35Cr14MoTi | – | – | – | ZSNCDT42 | |
| | – | – | 5666 | NiCr22Mo9Nb | – | – | – | NC22FeDNB | |
| | – | – | AMS5397 | NiCr15Cr10MoATi | – | – | – | – | |
| | – | – | AMS5399 | NiCr19Co11MoTi | – | – | – | NC19KDT | |
| | – | – | AMS5544 | NiCr19Fe19NbMo | – | – | – | NC20K14 | |
| | – | – | AMS5772 | CoCr22W14Ni | – | – | – | KC22WN | |
| | – | TA10-13/TA28 | AMSR56400 | TiAl6V4 | – | – | – | T-A6V | |
| | – | TA14/17 | AMSR54520 | TiAl5Sn2.5 | – | – | – | T-A5E | |

## 재질구분표 Comparison of Work-Piece

| ISO | Korea KS | United Kongdom BS | America AIS/SAE | German DIN | Spain UNF | Italy UNI | Sweden SS | France AFNOR | Japan JIS |
|---|---|---|---|---|---|---|---|---|---|
| K 주철 Cast iron | **Gray cast iron** | | | | | | | | |
| | GC100 | - | No20B | GG10 | - | G10 | 110 | Ft10D | FC100 |
| | GC150 | Grade150 | No25B | GG15 | - | G14 | 115 | Ft15D | FC150 |
| | GC200 | Grade220 | No30B | GG20 | - | G20 | 120 | Ft20D | FC200 |
| | GC250 | Grade260 | No35B | GG25 | - | G25 | 125 | Ft25D | Fc250 |
| | GC300 | Grade300 | GNo45B | GG30 | - | G30 | 130 | Ft30D | FC300 |
| | GC350 | Grade350 | No50B | GG35 | - | G35 | 135 | Ft35D | FC350 |
| | GCD400 | SNG420/2 | 60-40-18 | GGG40 | - | GS400-12 | 0717-02 | FCS400-12 | FCD400 |
| | GCD500 | SNG500/7 | 65-45-12 | GGG50 | - | GS500/7 | 0727-02 | HGS500-7 | FCD500 |
| | GCD600 | SNG600/3 | 80-55-06 | GGG60 | - | GS600/3 | 0732-03 | FGS600-3 | FCD600 |
| | GCD700 | SNG700/2 | 100-70-03 | GGG70 | - | GS700/2 | 0737-01 | FGS700-2 | FCD700 |
| | **Ductile cast iron** | | | | | | | | |
| | - | B340/12 | 32510 | GTS-35 | - | - | 0815 | MN35-10 | - |
| | - | P440/7 | 40010 | GTS-45 | - | - | 0852 | - | - |
| | - | P510/4 | 50005 | GTS-55 | - | - | 0854 | MP50-5 | - |
| | - | P570/3 | 70003 | GTS-65 | - | - | 0858 | MP60-3 | - |
| Aluminium | **Aluminium alloy** | | | | | | | | |
| | - | LM6 | A413.2 | G-AlSi12 | - | - | 4261 | - | - |
| | - | LM9 | A360.2 | G-AlSi10Mg(Cu) | - | - | 4253 | - | - |
| | - | LM20 | A413.1 | G-AiSi12(Cu) | - | - | 4260 | - | - |
| | - | LM24 | A380.1 | GD-AlSi8Cu | - | - | 4250 | 3- | - |
| | - | - | A413.0 | GD-AlSi12 | - | - | 4247 | - | - |

# 선반 작업시 주의사항
## Directions for the work of the lathe

선반장비에서 하이스피드 드릴을 처음 사용하실 경우, 가공물을 5mm 가량 드릴링 하신 후에,
코어(Core) 크기를 확인해 주시기 바랍니다.
코어(Core)경의 크기는 0.2mm~0.8mm가 되어야 하며, 코어가 너무 작거나 내측 인서트와
안쪽 코너부분이 깨진다면 드릴을 180 ° 회전하여 작업을 하시기 바랍니다.

In case of use the high speed drill first in the lathe, after drilling the workpiece around 5mm make sure the core size.
The core size should be 0.2mm-0.8mm.
If the core size is too small or the corner part in the center of inside insert break, it is desirable to work turning the drill to 180 angle.

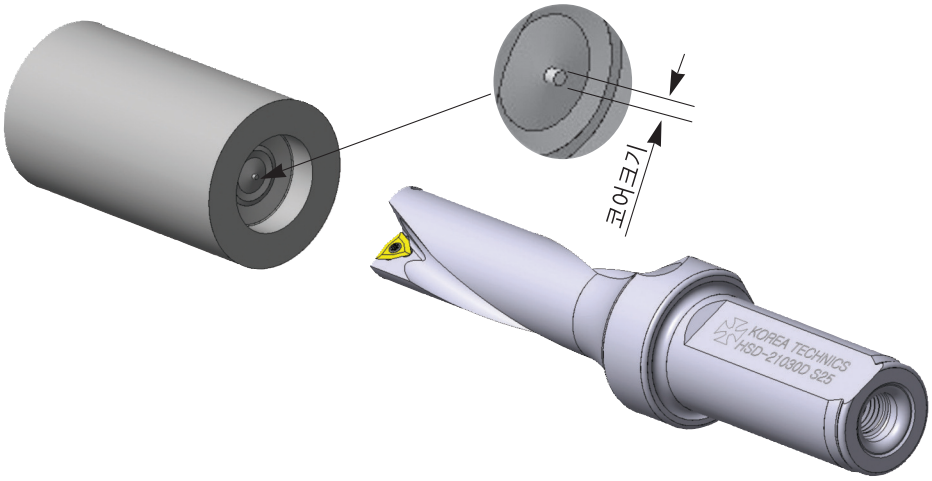


또한 선반에서 관통 작업을 할 경우, 원판(DISC)이 떨어져 나가며 부상의 위험이 발생될 수 있으니
반드시 안전커버를 사용하십시오.

In case of doing also the penetrating work in the lathe, coming off The original thing(DISC) the wound can happen so absolutely use the safety cover.

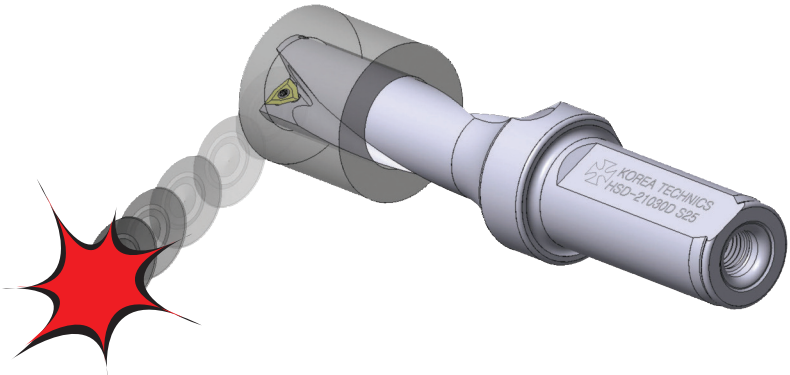

# HIGH SPEED DRILL 사용시 주의사항
## Directions for the use of HIGH SPEED DRILL

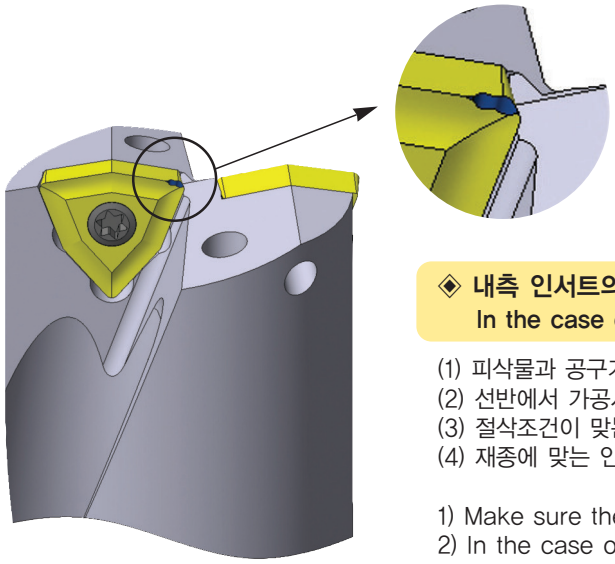

### ◈ 내측 인서트의 안쪽코너 부분이 깨질경우,
### In the case of breaking the inside insert,

(1) 피삭물과 공구가 단단히 고정되어 있는지 확인해 본다.
(2) 선반에서 가공시, 공구를 180 ˚ 회전시켜 가공해 본다.
(3) 절삭조건이 맞는지 확인해 본다.
(4) 재종에 맞는 인서트를 사용했는지 확인해 본다.

1) Make sure the workpiece and tool are fixed firmly.
2) In the case of drilling in the lathe, drill after turning the tool to 180 angle.
3) make sure the cutting condition is corret.
4) make sure the insert is correct for the workpiece.

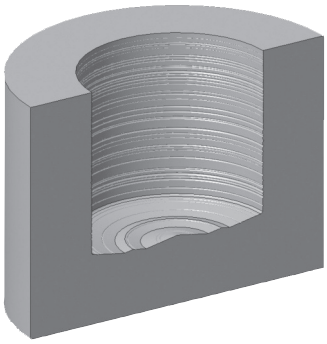

### ◈ 가공조도면이 거칠경우,
### In the case that drilling density is rough,

(1) 절삭유 압을 높여서 가공해 본다.
(2) 피삭물과 공구가 단단히 고정되어 있는지 확인해 본다.
(3) 절삭속도를 높여 가공해 본다.

1) The oil pressure raise and process it.
2) make sure the workpiece and tool are fixed firmly.
3) cutting speed raise and process it.

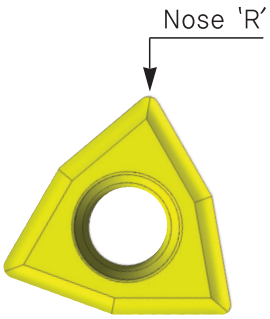


### ◈ 가공직경이 0.3mm정도 크거나 작게 나올 경우,
### In the case that drilling diameter is 0.3mm smaller and bigger.

(1) 인서트 Nose 'R' 크기를 확인해 본다.
(2) 스핀들부에 이물질이 있는지 확인해 보고, 아버의 내경 및 공구의 회전시 편심이 있는지 살펴본다.
(3) 절삭조건이 맞는지 확인해 본다.

1) Make sure the Nose 'R' size
2) Make sure there is foreign substance and make sure arbor inside diameter or when it turn, there is the one sided.
3) Make sure cutting condition is correct.

# TURBO DRILL&MAX DRILL 사용시 주의사항
## Directions for the use TURBO DRILL&MAX DRILL

◈ 아래 그림과 같이 가공물 표면에 센터드릴 직경보다 큰 홀이 있거나, 돌출된 경우 심한 진동으로 센터드릴과 인서트에 손상이 생길 수 있습니다.
◈ As the below pictures in the case that there are biger hole than center drill or protruded part, The center drill and insert can be broken by hard vibration.

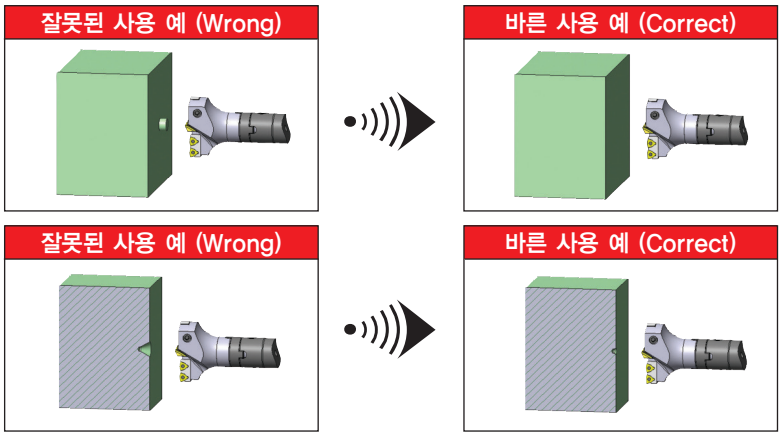


◈ 구배나 경사가 있는 가공면의 경우, 밀링작업하여 평평하게 하신후 드릴링 작업을 하십시오.
◈ In the case that there is inclined side, after make the part flat by milling work, please do drilling work.

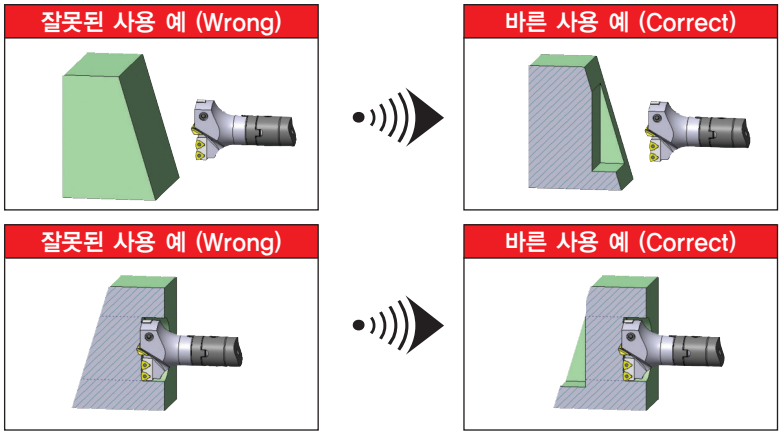


◈ 겹판가공은 불가합니다. 겹판가공을 원하실 경우, STD나 FXD 드릴을 사용하여 주십시오.
◈ Overlapped driling is impossible. In case of wanting the overlapped drilling, Please use STD and FXD drill.

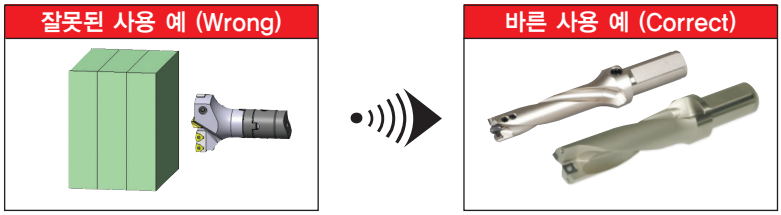

# 칩의 모양과 해결책
## The solution according to the chip shape

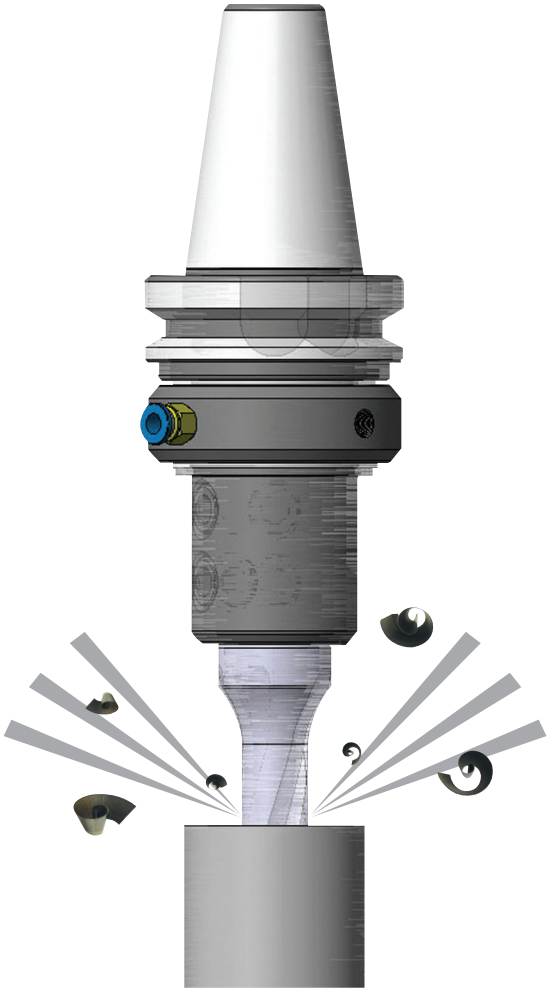

◈ 알맞은 칩 모양(Optimal Shape of chip)

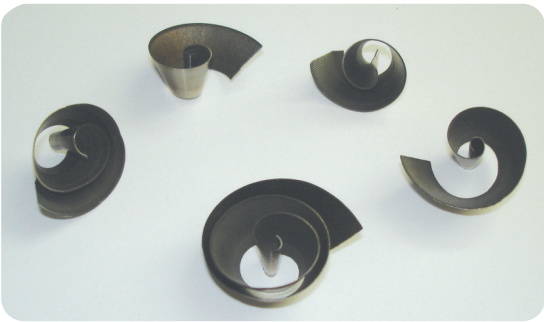

◈ 칩이 너무 짧은 경우(Too Short)

▶ 짧은 칩이 배출되면 인서트 파손이 생길 수 있습니다.
(1) 절삭유 압력을 높이세요.
(2) 회전속도와 피드를 낮추어 가공하세요.

▶ If short chip came out, the insert happen to break.
(1) Raise the oil pressure.
(2) After the turing speed and the feed come down, process it.

▶ 칩이 길게 발생되면, 원활한 칩배출이 되지 않고, 드릴에 엉키며 공구 손상이 생길 수 있으며, 면조도가 불량해 집니다.
(1) 탄소함량이 낮은 연강이나 스테인레스강은 회전속도를 높이고, 피드를 낮추어 가공하세요.
(2) 탄소함량이 높은 탄소강이나 합금강은 회전속도와 피드를 높여 가공하세요.

▶ If the chip is long, the chip does not come out properly and it is entangled on the drill.
It can arise tool damage and the drilled density is not good.
1) For mild steel and stainless steel contained the low carbon steel content, please process making the turning speed high and feed low.
2) For carbon steel or alloy cantained the low carbon content, process making the turning speed and feed high.

◈ 칩이 너무 긴 경우 (Too Loose)

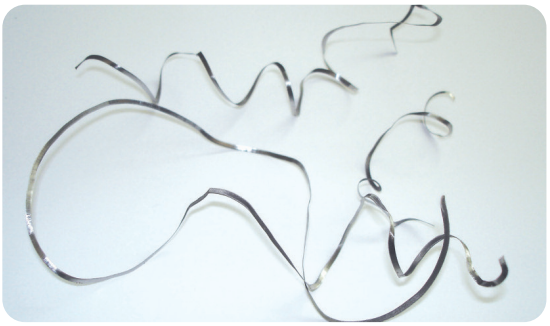

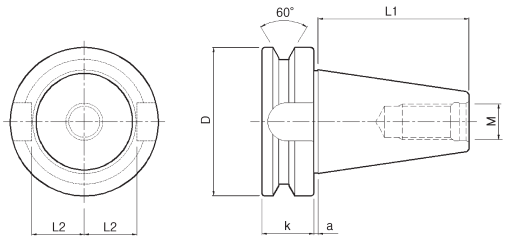


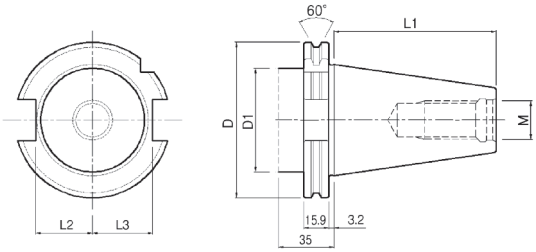


## BT/MAS Holder

| Taper No. | L1 mm | D mm | M mm | K mm | a mm | L2 mm |
|---|---|---|---|---|---|---|
| 40 | 65.4 | 63 | M16 | 25 | 2 | 22.8 |
| 50 | 100 | 100 | M24 | 35 | 3 | 35.5 |

## SK/DIN Holder

| Taper No. | L1 mm | D (max.) mm | D1 mm | M mm | L2 mm | L3 mm |
|---|---|---|---|---|---|---|
| 40 | 68.4 | 63.55 | 50 | M16 | 22.8 | 25 |
| 50 | 101.75 | 97.5 | 80 | M24 | 35.5 | 37.7 |

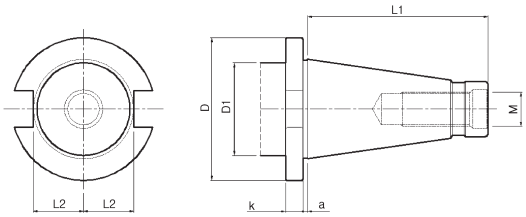


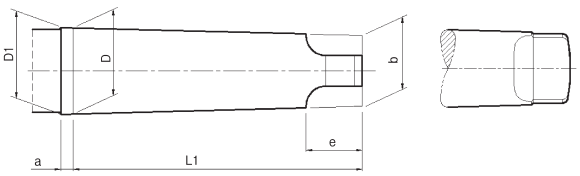


## NT/DIN 2080 Holder

| Taper No. | L1 mm | D mm | M mm/inch | K mm | a mm | L2 mm |
|---|---|---|---|---|---|---|
| 40 | 93.4 | 63 | M16 | 10 | 1.6 | 22.5 |
| 50 | 126.8 | 97.5 | M24 | 12 | 3.2 | 35.3 |
| 40 | 93.4 | 63 | 5/8-11 UNC | 10 | 1.6 | 22.5 |
| 50 | 126.8 | 97.5 | 1-8 UNC | 12 | 3.2 | 35.3 |

## MT/DIN 228 Holder

| Taper No. | L1 mm | D mm | D1 mm | M mm | e mm | b mm |
|---|---|---|---|---|---|---|
| 4 | 117.5 | 31.267 | 31.6 | 6.5 | 24 | 25.2 |
| 5 | 149.5 | 44.399 | 44.7 | 6.5 | 29 | 36.5 |
| 6 | 210 | 63.348 | 63.8 | 8 | 40 | 52.4 |

# 오일 피드 아버의 특징 및 사용법
## Oil feed arbor feature and use

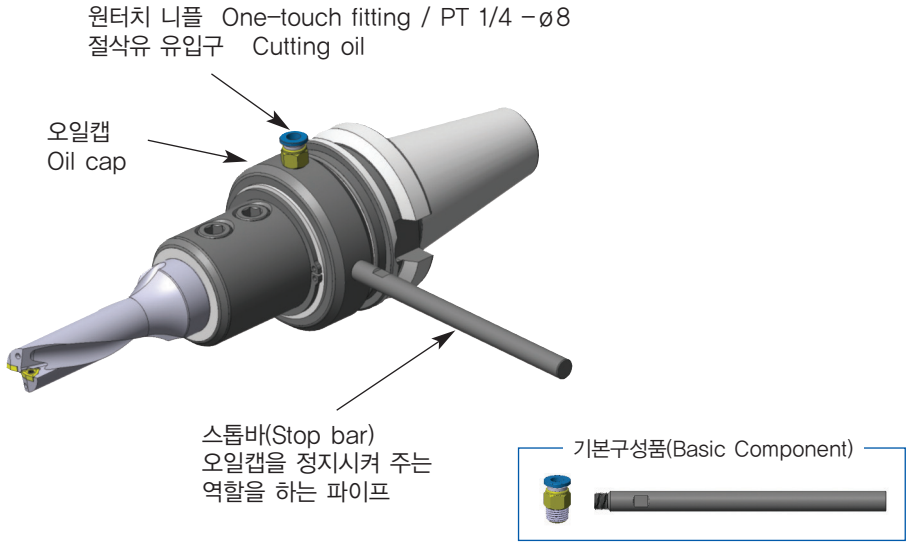


(1) 가공직경이 비교적 크거나 깊은홀 가공시 반드시 절삭유 내부 공급을 해야 한다.

(2) 오일피드 아버는 범용장비에서도 내부 급유를 유도하여 깊은홀 가공이 가능하도록 도와주는 유용한 공구이다.

(3) 오일캡 외부에는 90도 방향으로 쓰레드가 2곳이 나 있는데, 한 곳으로는 절삭유가 유입되는 곳이고, 다른 한 쪽으로는 스톱바가 장착되는 곳이다.

(4) 오일캡 내부에는 절삭유 누유를 막아주고 회전시 발생되는 마찰을 최소화 시켜주는 테프론 씰이 장착되어 있다.

(5) 회전시 오일캡은 정지된 상태로 절삭유를 공급해 준다.

(6) 오일피드 타입의 아버로는 OMS, OME, OMX, CMS, CMB 등이 있음.

(1) When the diameters to be processed are too large, or when deep holes are processed, the cutting-oil must be supplied into the interior of the device.

(2) The oil feed arbor is a useful tool that enables processing deep holes, even with general-purpose equipment.

(3) Two threads are seen at 90 degrees from the outside of the oil cap : one for the feature where the cutting-oil is supplied, and the other for the feature where the stop bar is installed.

(4) There is a teflon seal inside the oil cap that keeps the cutting-oil from leaking and it also minimizes friction.

(5) When rotating, the cutting-oil is supplied with the oil cap stopped : the maximum rotation speed is 2,000 rpm. (CMB : 4,000 rpm)

(6) Arbor oil feed types include OMS, OME, OMX, CMS, CMB

# 자동타입 아버 사용법
## Automatic arbor manuals

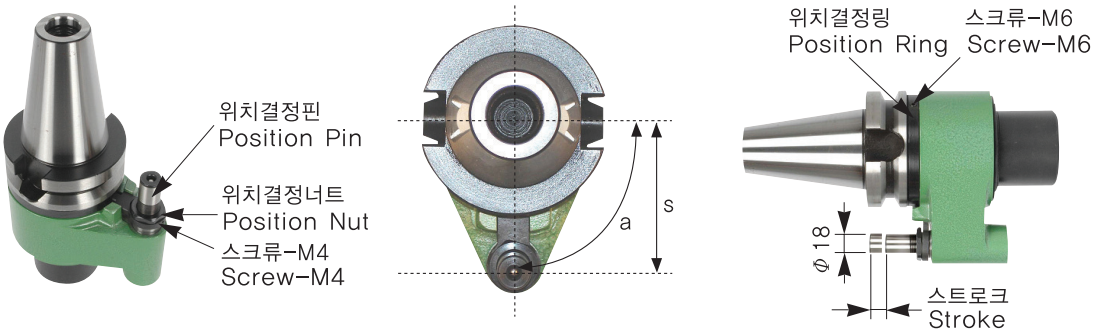


### ▶ 코리아테크닉스 자동타입홀더의 특징(BT-OAS, BT-OAE, BT-OAX 공통)

- 자동공구 교환이 가능한 내부 급유형 절삭유 공급 장치입니다.
- 내열 내마모성이 우수한 테프론을 특수처리하여 고속에서도 누수가 없고, 마찰 저항이 작아 장시간 운전이 가능합니다. (MAX. 3000RPM)
- 장비에 맞추어 위치결정핀의 높이와 각도(a)를 조절할 수 있습니다.

### ▶ The characteristics of Kprea Technics' Automatic Holder

- It has an internal fueling type ofcutting-oil supply apparatus with automatic tool changing function.
- Coated with teflon that has excellent heat-and wear-resistance characteristics via a specific coating process. As a result, no leakage occurs and friction is also decreased, which in turn allows prolonged rotation(maximum of 3,000rpm)
- The height and angle(a) of the positioning pin are adjustable depending on equipment dimensions.

### ▶ 위치결정핀의 높이와 각도(a)의 조절 방법

- 각도(a)의 조절방법
  ① 위치결정링에 체결되어 있는 스크류(2EA-M6)를 렌지로 풀어준다.
  ② M/C에 장착된 위치 결정 블록의 위치에 맞게 오일케이스를 회전시킨다.
  ③ 정확한 위치에 오면 스크류(2EA-M6)를 완전히 체결한다.
- 위치결정핀의 높이 조절방법
  ① 위치결정핀 스크류(M4)와 너트를 풀어준다.
  ② 위치결정블록의 높이를 확인하고, 알맞은 높이로 바이스등으로 돌려 조절한다.
  (※ 스트로크양 : BT40-4.5mm, BT50-7.5mm)
  ③ 셋팅후엔 스크류와 너트를 완전히 조여준다.

### ▶ Adjustment methdo for the height of the positioning pin and angle(a) :

- Adjustment method for angle(a) :
  ① Unfasten the screw (2EA-M6)secured to the positioning ring with the wrench. (hex key wrench, 3mm)
  ② Rotate the oil case in line with the positioning control block installed in the M/C.
  ③ Completely fasten the screw(2EA-M6)when it is aligned in the proper position.
- Adjustment method for height of the positioning pin :
  ① Unfasten the positioning pin screw.(M4 : hex wrench, 2mm)and unt(hex key wrench, 27mm)
  ② Confirm the height of the positioning control block, and then, hold and turn using the vise-grip to adjust it.(※ stroke distance : BT40=4.5mm, BT50=7.5mm)
  ③ Completely fasten the screw and unt after setting.

# CYLINDRICAL SHANK TYPE

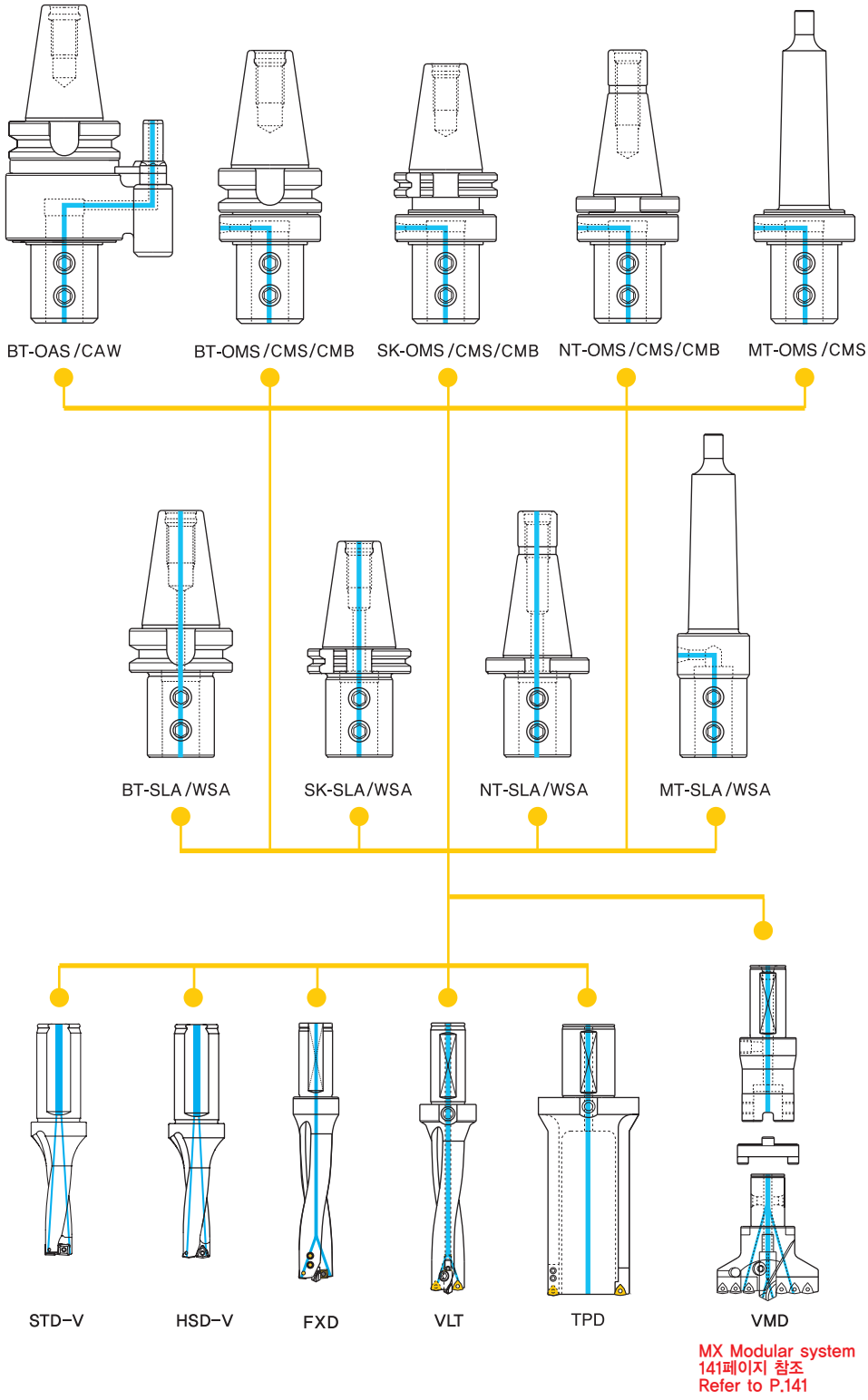


MX Modular system
141페이지 참조
Refer to P.141

# MX MODULAR SYSTEM

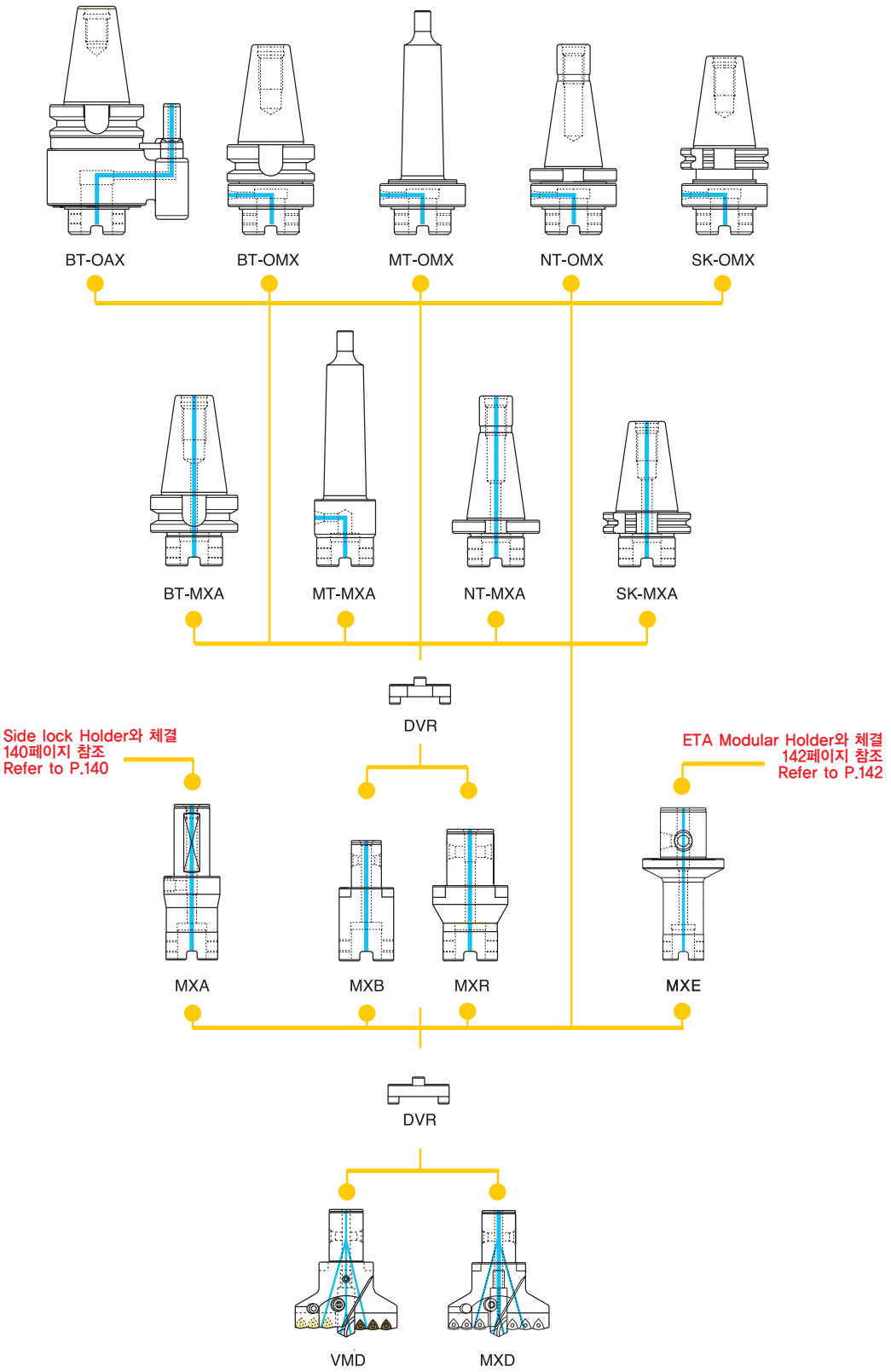

# EXT MODULAR SYSTEM

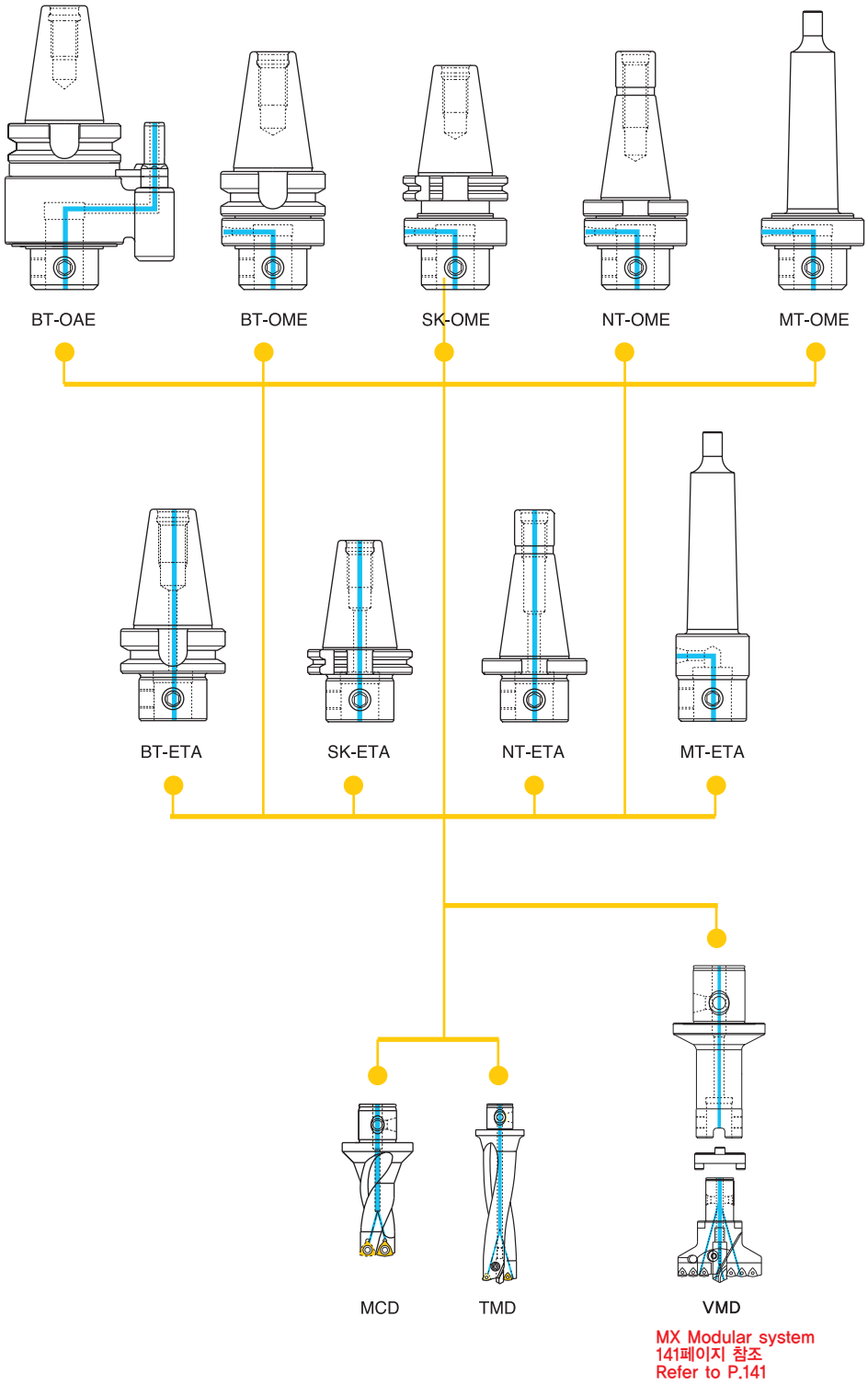

# EMS MODULAR SYSTEM

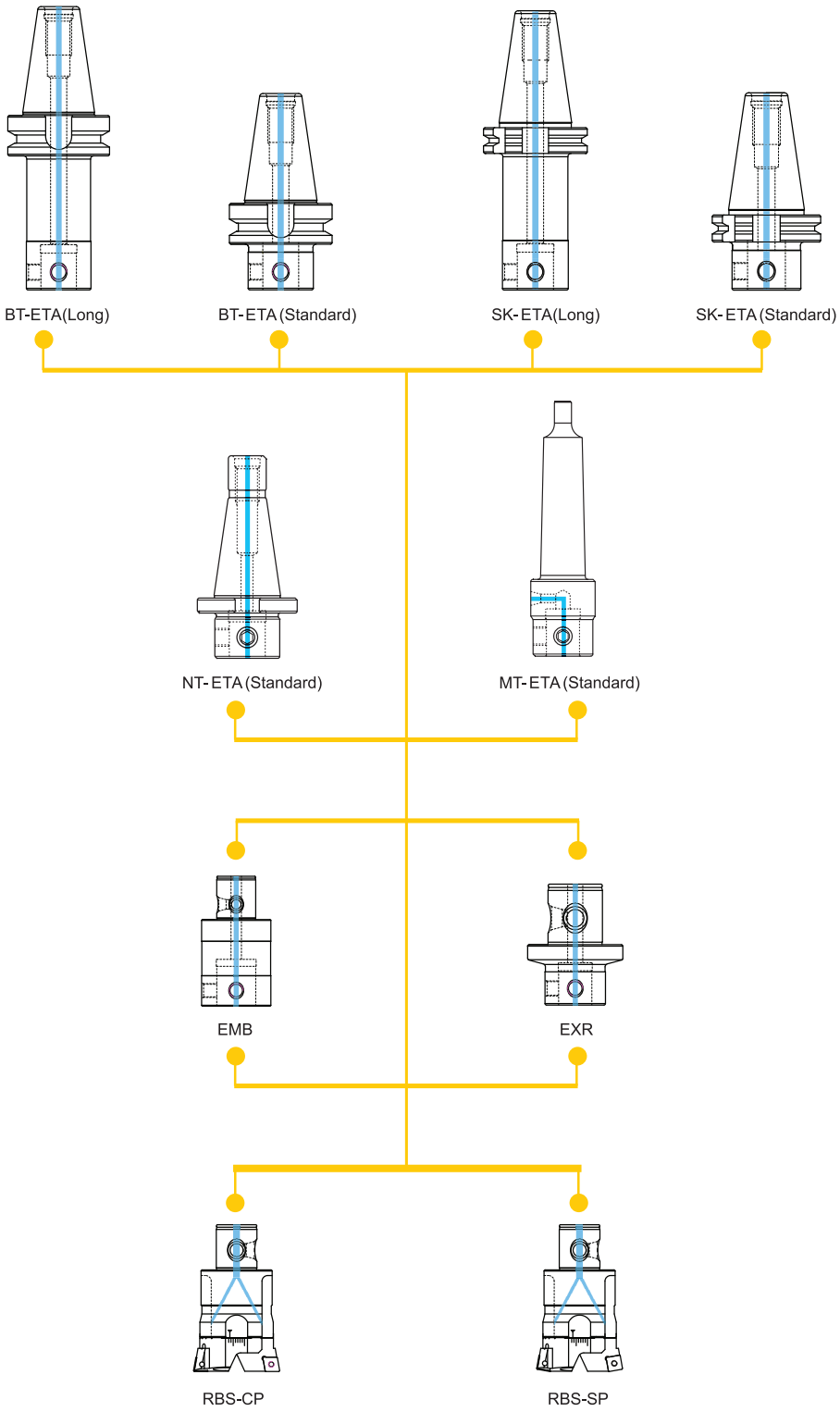

## VMD MX-모듈 조립표

| Code No. | L1 | Drive ring | MX Extention | Drive ring | MX 모듈러 Arbor | MX Cylindrcal Extention | Side lock arbor | MX Reducer | Drive ring | + |
|---|---|---|---|---|---|---|---|---|---|---|
| VMD-045050<br>VMD-050055 | 50 | DVR-281310 | MXB-2813115<br>MXB-2813150<br>MXB-2813200<br>MXB-2813300 | DVR-281310 | X | MXA-3213115<br>MXA-3213200<br>MXA-3213300 | BT50-SLA-32105<br>BT50-OMS-32135 | MXR-1613100 →<br>MXR-3213100 →<br>MXR-5013080 → | DVR-321610 →<br>DVR-583214 →<br>DVR-805014 → | ①<br>④<br>⑥ |
| VMD-05060<br>VMD-060065<br>VMD-065070 | 60 | DVR-321610 | ①<br>MXB-3216115<br>MXB-3216200<br>MXB-3216300 | DVR-321610 | | ①<br>MXA-4016125<br>MXA-4016200<br>MXA-4016300 | BT50-SLA-40105<br>BT50-OMS-40145 | ①<br>MXR-2216100 →<br>MXR-3216100 →<br>MXR-5016080 → | DVR-402212 →<br>DVR-583214 →<br>DVR-805016 → | ②<br>④<br>⑥ |
| VMD-070075<br>VMD-075080<br>VMD-080085 | 70 | DVR-402212 | ②<br>MXB-4022113<br>MXB-4022200<br>MXB-4022300 | DVR-402212 | | ②<br>MXA-4022113<br>MXA-4022200<br>MXA-4022300 | | ②<br>MXR-2722100 →<br>MXR-3222100 →<br>MXR-5022080 → | DVR-482712 →<br>DVR-583214 →<br>DVR-805016 → | ③<br>④<br>⑥ |
| VMD-085090<br>VMD-090095<br>VMD-095100 | 70 | DVR-482712 | ③<br>MXB-4827113<br>MXB-4827200<br>MXB-4827300 | DVR-482712 | | ③<br>MXA-4032186<br>MXA-4032300 | | ③<br>MXR-3227100 →<br>MXR-5027080 → | DVR-583214 →<br>DVR-805016 → | ④<br>⑥ |
| VMD-100105<br>VMD-105110<br>VMD-1110115 | 80 | DVR-583214 | ④<br>MXB-5832186<br>MXB-5832300 | DVR-583214 | ④<br>BT50-MXA-32070<br>BT50-OMX-32100 | ④<br>MXA-4032186<br>MXA-4032300 | | ④<br>MXR-4032100 →<br>MXR-5032080 → | DVR-704014 →<br>DVR-805016 → | ⑤<br>⑥ |
| VMD-115120<br>VMD-120125<br>VMD-125130<br>VMD-130135<br>VMD-135140 | 90 | DVR-704014 | ⑤<br>MXB-7040186<br>MXB-7040300<br>MXB-7040500 | DVR-704014 | X | ⑤<br>MXA-5040186<br>MXA-5040300 | BT50-SLA-50130<br>BT50-OMS-50170 | ⑤<br>MXR-5040150 → | DVR-805016 → | ⑥ |
| VMD-140150<br>VMD-150160<br>VMD-160170<br>VMD-170180 | 100 | DVR-805016 | ⑥<br>MXB-8050204<br>MXB-8050300<br>MXB-8050500 | DVR-805016 | ⑥<br>BT50-MXA-50080<br>BT50-OMX-50110 | ⑥<br>MXA-5050184<br>MXA-5050300 | | X | X | X |

기본공통적용
Basic common application

연속 연결 가능
Continuous connection possible

연속 연결 불가능
Continuous connection impossible

툴링완료
Complete combination