KORLOY TECH-NEWS

No:134-3
METRIC

KORLOY

End-mill for High Speed Machining

Z-Max

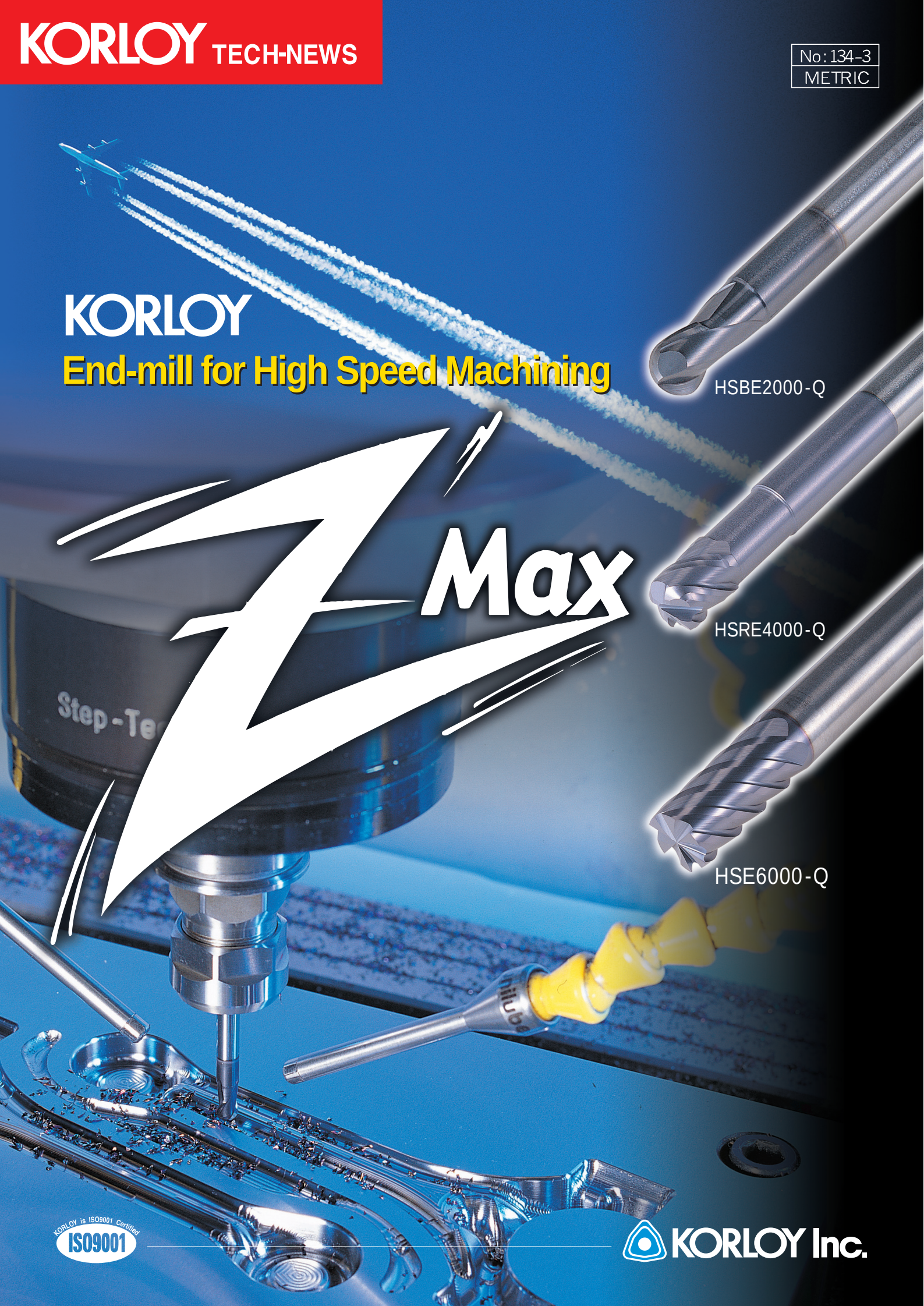

KORLOY is ISO9001 Certified
ISO9001

KORLOY Inc.

HSBE2000-Q

KORLOY

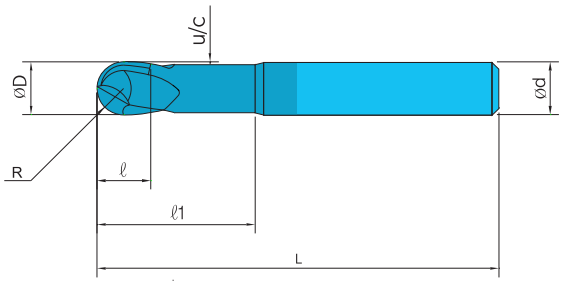

HSBE2000-Q

Specification

- Solid type, Copy
- 30° Helix with 2 flutes
- Available Diameter ; ø1.0 ~ ø16.0 mm

Features

- Enhanced Edges toughness and rigidity
- Superior Chipping resistance guarantee consistency performance
- Superior cutting performance with High-hardness work-piece at high speed and high feed cutting

Cat. No.	ø D	ℓ	ℓ1	L	u/c	ø d	Stock
HSBE2010-Q	1	1.0	-	60	-	6	●
HSBE2020-Q	2	2.5	1.9	60	0.05	6	●
HSBE2030-Q	3	4.0	2.8	60	0.10	6	●
HSBE2040-Q	4	5.0	3.7	65	0.15	6	●
HSBE2050-Q	5	6.0	4.6	65	0.20	6	●
HSBE2060-Q	6	7.0	5.6	75	0.20	6	●
HSBE2080-Q	8	9.0	7.4	75	0.30	8	●
HSBE2100-Q	10	11.0	9.4	80	0.30	10	●
HSBE2120-Q	12	12.0	11.4	90	0.30	12	
HSBE2160-Q	16	16.0	15.4	100	0.30	16	
HSBE2200-Q	20	20.0	19.0	110	0.50	20	

HSBE2000-Q **Recommended Cutting Cond.**

Work Piece / ø		Pre-Harden Steel, Tool Steel (High Speed Cutting Cond.) (HRC48 <)	(HRC52 <)	(HRC53 >)	Stainless Steel Ti-Alloy
R0.5~R1.4	V	380-**400**-420	340-**360**-380	280-**300**-320	60-**75**-90
	f	0.025~0.050	0.025~0.050	0.025~0.050	0.003~0.005
R1.5~R2.5	V	380-**400**-420	340-**360**-380	280-**300**-320	60-**75**-90
	f	0.040~0.050	0.040~0.050	0.040~0.050	0.007~0.013
R3.0~R6.0	V	380-**400**-420	340-**360**-380	280-**300**-320	60-**75**-90
	f	0.050~0.080	0.050~0.080	0.050~0.080	0.017~0.033
R7.0~R12.5	V	380-**400**-420	340-**360**-380	280-**300**-320	60-**75**-90
	f	0.090~0.100	0.090~0.100	0.090~0.100	0.040~0.057

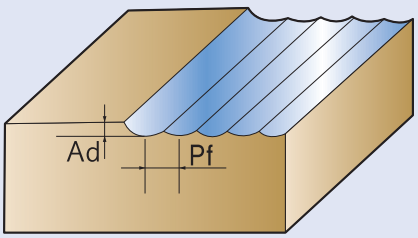

Note) 1. High Speed Machining ; Ad=0.015~0.03 × ø, Pf=f(mm/rev)
2. General Performance ; Ad=0.2~0.3 × ø(R ≤1.0,0.2 × ø), Pf=max0.7 × ø (R ≤1.0,0.6 × ø)
3. Using a speed (V) calculated with effective cutting diameter Using a maximum RPM, when the machine can't reach up to proper Speed.

HSRE4000-Q

KORLOY

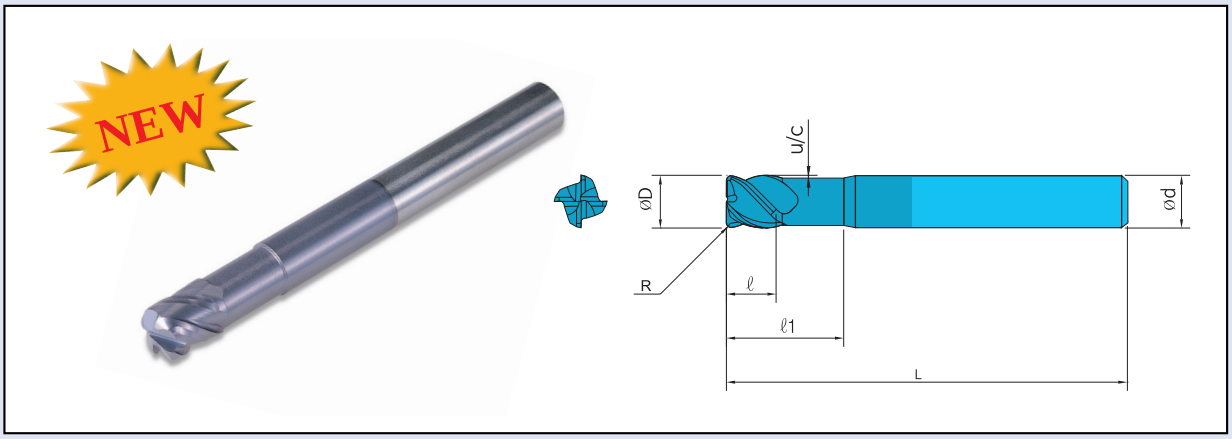

HSRE4000-Q

Specification

- Solid type, Pocket of mold
- 45° Helix with 4 flutes
- Available Diameter ; ø3.0 ~ ø16.0 mm

Features

- Semi ball nose end mill
- Enhanced Edges toughness and rigidity
- In order to get rid of interfere of work piece, recess(u/c) adapted

Cat. No.	ø D	R	ℓ	ℓ1	L	u/c	ø d	Stock
HSRE4030-Q	3	1.0	4	9.0	60	0.10	6	●
HSRE4040-Q	4	1.0	5	10.0	65	0.15	6	●
HSRE4050-Q	5	1.0	6	13.0	65	0.15	6	●
HSRE4060-Q	6	1.5	7	15.0	75	0.20	6	●
HSRE4080-Q	8	2.0	9	20.0	75	0.30	8	●
HSRE4100-Q	10	2.5	11	25.0	80	0.30	10	●
HSRE4120-Q	12	3.0	13	25.0	90	0.30	12	
HSRE4160-Q	16	4.0	17	32.0	100	0.30	16	

HSRE4000-Q **Recommended Cutting Cond.**

Work Piece / ø		Carbon steel, Alloy steel (HRC25 <)	Carbon steel, Alloy steel (HRC45 <)	Heat treated steel (HRC65 <)	Cast Iron (general, ductile)
3.0~5.9	V	80-**100**-120	50-**60**-70	20-**30**-40	100-**120**-150
	f	0.018~0.036	0.009~0.018	0.009~0.018	0.027~0.060
6.0~12.9	V	80-**100**-120	50-**60**-70	20-**30**-40	100-**120**-150
	f	0.038~0.070	0.019~0.035	0.019~0.035	0.065~0.157
13.0~20.0	V	80-**100**-120	50-**60**-70	20-**30**-40	100-**120**-150
	f	0.075~0.125	0.040~0.075	0.010~0.075	0.160~0.250

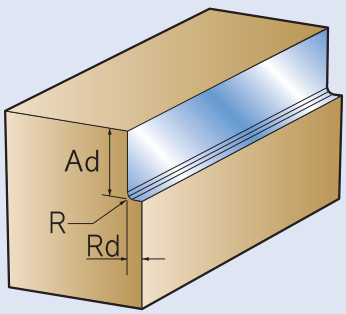

Note) 1. Shoulder cutting ; Ad=1.5 × ø, Rd=0.1 × ø

HSE6000-Q

KORLOY

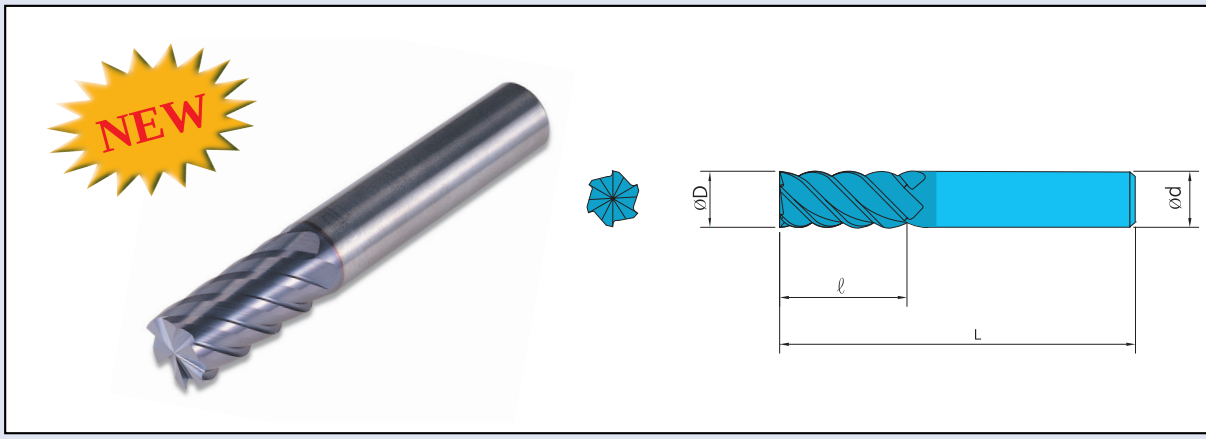

HSE6000-Q

Specification

- Solid type, For the hard material cutting at high speed and high feed
- 45° Helix with 4,6,8 flutes
- Available Diameter ; ø3.0 ~ ø20.0 mm

Features

- Efficient cutting for high hardness work piece
- Enhanced Edges toughness and rigidity

Cat. No.	ø D	ℓ	L	ø d	Stock
HSE4030-Q	3.0	8	50	6	●
HSE4040-Q	4.0	10	50	6	●
HSE4050-Q	5.0	12	50	6	●
HSE6060-Q	6.0	12	50	6	●
HSE6080-Q	8.0	16	60	8	●
HSE6100-Q	10.0	20	70	10	●
HSE6120-Q	12.0	24	75	12	●
HSE8160-Q	16.0	32	90	16	●
HSE8200-Q	20.0	40	105	20	

HSE6000-Q **Recommended Cutting Cond.**

Work Piece / ø		Carbon steel, Alloy steel (HRC25 <)	Carbon steel, Alloy steel (HRC45 <)	Heat treated steel (HRC65 <)	Cast Iron (general, ductile)
6.0~12.0	V	80-**100**-120	50-**60**-70	20-**30**-40	100-**120**-150
	f	0.082~0.120	0.050~0.090	0.020~0.038	0.080~0.220
16.0~25.0	V	80-**100**-120	50-**60**-70	20-**30**-40	100-**120**-150
	f	0.120~0.130	0.090~0.100	0.038~0.050	0.250~0.350
16.0~25.0	V	80-**100**-120	50-**60**-70	20-**30**-40	100-**120**-150
	f	0.120~0.130	0.090~0.100	0.038~0.050	0.250~0.350

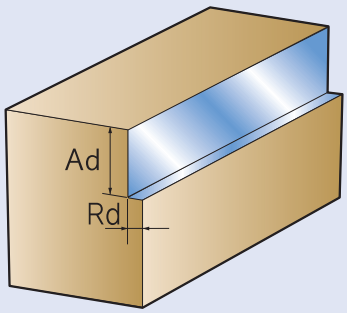

Note) 1. Shoulder cutting ; Ad=1.5 × ø , Rd=0.2~0.025 × ø

Distinctive Features of Z-Max Seires

- Exclusive end-mill series for efficient machining of mold
- Optimal carbide substrate and coating film for end-mill
- High rigidity, high precision

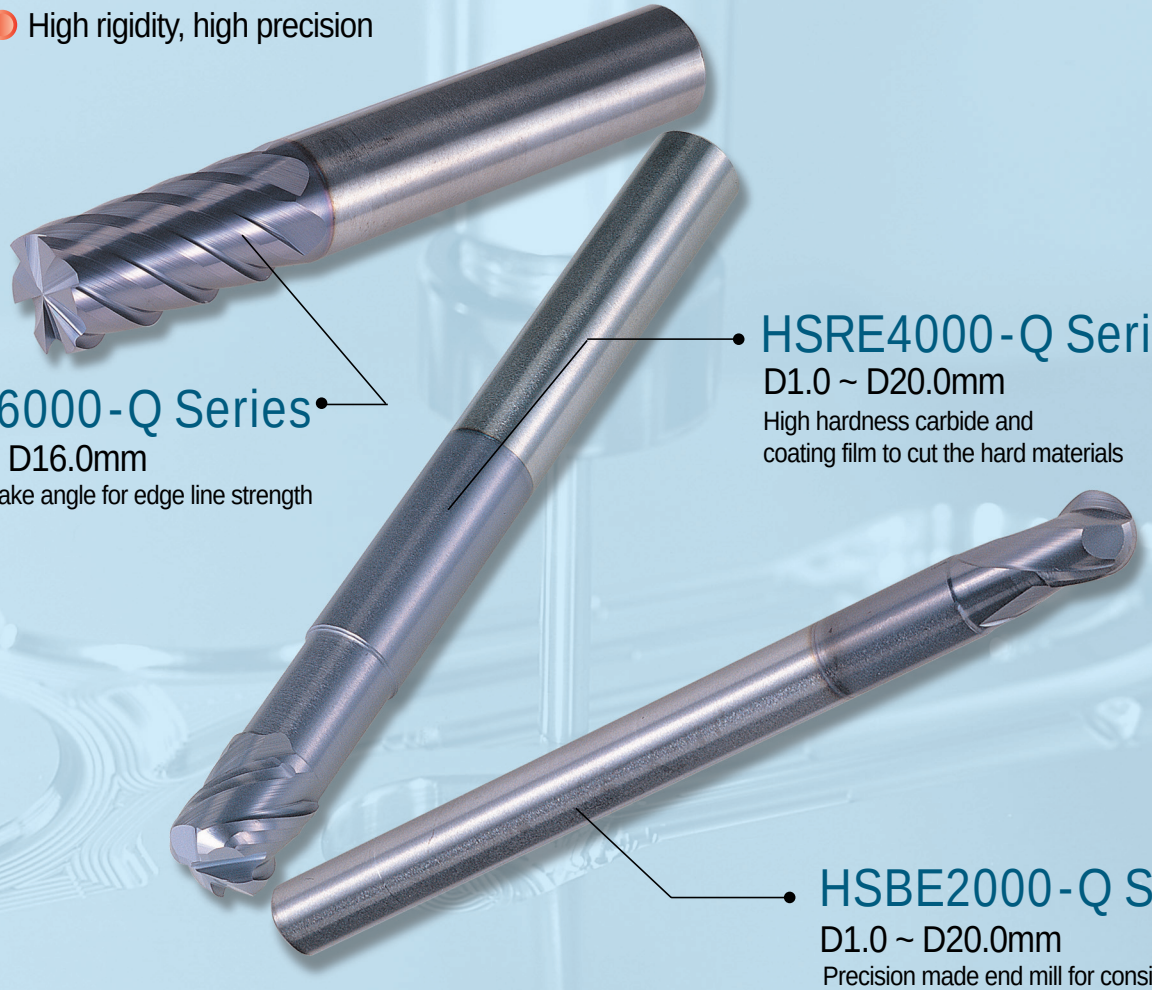

HSE6000-Q Series

D3.0 ~ D16.0mm

Optimal rake angle for edge line strength

HSRE4000-Q Series

D1.0 ~ D20.0mm

High hardness carbide and coating film to cut the hard materials

HSBE2000-Q Series

D1.0 ~ D20.0mm

Precision made end mill for consistency tool life

End mill for High speed, high feed cutting of hard materials

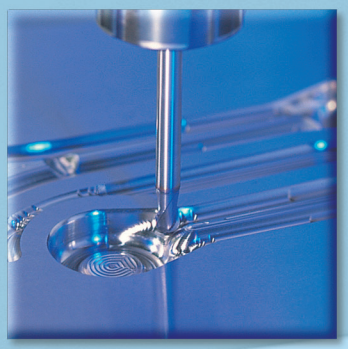

HSBE2000-Q

HSRE4000-Q

HSE6000-Q

Warning

Directions for End mill handling

- Handle with care, when take out the end mill from the case not to cut your hand by edge line or to drop the end mill.
- Take safety outfit to protect yourself from the pieces to be detached from endmill at general usage.
- Lock the work piece tightly before cut, and check the size of tool and work piece. Control the cutting condition appropriately with tool and work piece.
- Stop the machine as soon as possible if there's any unusual sign(noise, smoke etc) during the cut.
- Do not reconstruct the end mill.

Directions for Regrinding of End mill

- Regrinding of end mill may cause dust, harm to human health. Take safety outfit(glasses,mask etc) to protect yourself from the dust.
- Wet grinding is strongly recommended.

KORLOY Inc.

HEAD OFFICE
1606-2, Seocho 1-Dong, Seocho-Gu, Seoul, Korea
TEL : +82 2 522 3181 FAX: +82 2 522 3184, + 82 2 3474 4744
WEB : www.korloy.com

CHEONGJU FACTORY
53-16, Songjeong-Dong, Hungduk-Gu, Chengju, Chungcheongbuk-Do, Korea
TEL : +82 43 262 0141 FAX : + 82 43 262 0146
E-MAIL : export@korloy.com

JINCHEON FACTORY
767-1, Guangheawon-Ri, Guangheawon-Myon, Jincheon-Gun, Chungcheongbuk-Do, Korea
TEL : +82 43 535 0141 FAX : + 82 43 535 0144

july. 2005